CITY OF SOUTH GATE

STANDARD DRAWINGS FOR

WATER AND SEWER SYSTEMS

2021 EDITION

Prepared By:
Public Works Department

PREFACE

THESE **"STANDARD DRAWINGS FOR WATER AND SEWER CONSTRUCTION - 2021 EDITION"** (STANDARD DRAWINGS) HAVE BEEN PREPARED AND ADOPTED BY THE CITY OF SOUTH GATE, PUBLIC WORKS DEPARTMENT.

THESE STANDARD DRAWINGS SHALL BE USED AS GUIDES FOR PREPARING CONSTRUCTION PLANS AND FOR CONSTRUCTION OF THE DETAILED ITEMS. THEY WILL BE USED ON PUBLIC WORKS CONTRACTS, MAINTENANCE AND REPAIRS, AND ANY CONSTRUCTION IN PUBLIC RIGHT-OF-WAY OR ON PRIVATE PROPERTY WHERE PERMITS ARE REQUIRED. THEY ARE FOR USE IN CONCERT WITH THE **LATEST EDITION OF THE "GREENBOOK - STANDARD SPECIFICATIONS FOR PUBLIC WORKS CONSTRUCTION"**.

IT SHALL BE THE ENGINEER'S OR CONTRACTOR'S RESPONSIBILITY TO POSSESS COPIES OF THE STANDARD PLANS.

"PERMITTEES" WILL BE REQUIRED TO OBTAIN CURRENT "STANDARD DRAWINGS" PRIOR TO ISSUANCE OF ANY PERMIT. ALL CONTRACTORS ARE REQUIRED TO CONSTRUCT IN ACCORDANCE WITH CURRENT "STANDARD DRAWINGS".

THE ELECTRONIC COPY OF THE STANDARD DRAWINGS IS AVAILABLE FOR DOWNLOAD FROM THE CITY'S WEBSITE:

http://www.cityofsouthgate.org/225/Public-Works

UPDATES TO THE STANDARD DRAWINGS WILL BE POSTED TO THIS WEBSITE AS THEY ARE ADOPTED BY THE CITY OF SOUTH GATE.

USERS OF THE STANDARD DRAWINGS ARE ENCOURAGED TO SUBMIT CORRECTIONS AND PROPOSED CHANGES TO THE STANDARDS DRAWINGS TO PUBLIC WORKS DEPARTMENT, STANDARDS AND CONTRACT DOCUMENTS SECTION AT pwengineering@sogate.org.

Arturo Cervantes, P.E.
Assistant City Manager/Director of Public Works

TABLE OF CONTENTS

SHEET NO.	TABLE OF CONTENTS

GENERAL

WATER SYSTEM

SHEET NO.	TABLE OF CONTENTS

ABBREVIATIONS AND SYMBOLS

ABBREVIATIONS AND SYMBOLS

ABS	Acrylonitrile – butadiene – styrene
AC	Asphalt Concrete
ACI	American Concrete Institute
ACP	Asbestos Cement Pipe
ADA	Americans with Disabilities Act
ADAS	Americans with Disabilities Act Standards
AGG	Aggregates
ANSI	American National Standards Institute
ASCE	American Society of Civil Engineers
ASTM	American Society for Testing and Materials
AWWA	American Water Work Association
CAL/OSHA	California Occupational Safety and Health Administration
CalTrans	California Department of Transportation
CATV	Cable/TV
CC	Calcium Chloride
C/C	Center to Center
CCF	One Hundred Cubic Feet
CF	Cubic Foot
CFS	Cubic Feet per second
CL	Center Line
CLR	Clear
CMLCP	Cement mortar lined coated steel pipe
CONC	Concrete
CSP	Corrugated steel pipe
CTB	Cement treated base
CV	Check valve
CY	Cubic Yard
D	Diameter or Load of Pipe
DCDA	Double Check Detector Assembly
DI	Ductile Iron
DIA	Diameter
Dist.	Distance or Distribution Main
DWG	Drawing
EA.	Each

CITY OF SOUTH GATE
INCORPORATED JAN 20, 1923

CITY OF SOUTH GATE
DEPARTMENT OF PUBLIC WORKS

ABBREVIATIONS AND SYMBOLS

APPROVED
DIRECTOR OF PUBLIC WORKS

8/26/21
DATE

REVISION

STD. NO.
GEN-1
SHEET 1 OF 3

ABBREVIATIONS AND SYMBOLS

ELEV	Elevation
EX	Existing
FG	Finished grade
FIP	Female Iron Pipe
FL	Flow line
FLG	Flanged
GA	Gauge
GALV	Galvanized
H	High or height
HEX	Hexagonal
HORIZ	Horizontal
HT	Height
ID	Inside diameter or Identification Joint
JT	Joint
LAP	Overlap
LOL	Layout line
MAX	Maximum
MJ	Mechanical Joint
MIN	Minimum
NRS	Non–Rising Stem
OC	On center
OD	Outside diameter
PC	Point of curvature
PCC	Portland cement concrete
PCC	Point of compound curvature
PCF	Pounds per cubic foot
PCR	Point of curb return
PL	Property line or Place
PO	Push on
PPB	Pedestrian Push Button
PSI	Pound per square inch
PVC	Polyvinyl Chloride
PWD	Public Works Department
R	Radius

CITY OF SOUTH GATE
INCORPORATED JAN 20, 1923

CITY OF SOUTH GATE
DEPARTMENT OF PUBLIC WORKS

ABBREVIATIONS AND SYMBOLS

APPROVED
DIRECTOR OF PUBLIC WORKS

8/26/21
DATE

REVISION

STD. NO.
GEN-1

SHEET 2 OF 3

ABBREVIATIONS AND SYMBOLS

RCV	Remote Control Valve
R/W	Right-of-way
REINF	Reinforced or reinforcement
RPDA	Reduced Pressure Detector Assembly
RWGV	Resilient Wedge Gate Valve
RW	Recycled water
S	Slope or second
SCRW	Steel cylinder rod wrapped
SD	Storm drain
SE	Sand Equivalent
SI	International System of Units (Metric)
Sqft	Square foot
STD NO.	Standard Drawing Number
STR	Straight
TOT	Total
TYP	Typical
USC	Univ. of Southern California
VERT	Vertical
W	Water, Wider or width
W/	With
WWF	Welded wire fabric
#	Pounds
@	At
%	Percent
ft. or FT	Feet
'	Feet
"	Inches
1	Number
/	Per or (between words)
o	Degree
(*)	See comments
℄	Center Line

CITY OF SOUTH GATE
INCORPORATED JAN 20, 1923

CITY OF SOUTH GATE
DEPARTMENT OF PUBLIC WORKS

ABBREVIATIONS AND SYMBOLS

APPROVED

DIRECTOR OF PUBLIC WORKS

8/26/21
DATE

REVISION

STD. NO.
GEN-1

SHEET 3 OF 3

DESCRIPTION	SYMBOL	DESCRIPTION	SYMBOL
PROPOSED WATER MAIN	W	TRAFFIC SIGNAL	TS
ABANDONED WATER MAIN	W (ABD)	STREET LIGHT	SL
IRRIGATION	IRRIG	FIRE ALARM	FA
RECLAIMED WATER	RW	CATV	CATV
OIL LINE	O	FIBER OPTIC CABLE	FIBO
PROPOSED SEWER MAIN	S		
PROPOSED SEWER MANHOLE	M.H. NO.		
CLEAN-OUT	C.O.		
DEAD END	D.E.		
STUB			
CONCRETE ENCASEMENT			
CUT OFF WALL			
SEWER LATERAL	S PROPERTY LINE		
FORCEMAIN			
PROPERTY LINE			
EDGE OF PAVEMENT			
EXISTING SEWER LATERAL	S		
EXISTING WATER LATERAL	W		
EXISTING GAS LINE. "HP" INDICATES HIGH PRESSURE.	G 3" HP		
EXISTING ELECTRIC CONDUIT /CABLE; "OH" INDICATES OVERHEAD	E OH		
EXISTING TELEPHONE CONDUIT(S)	T		
EXISTING TELEVISION CONDUIT(S)	TV		
EXISTING WATER MAIN	W 8" DI		
EXISTING SEWER MAIN	S 8" VCP		
EXISTING STORM DRAIN	SD 18" RCP		

CITY OF SOUTH GATE
INCORPORATED JAN 20, 1923

CITY OF SOUTH GATE
DEPARTMENT OF PUBLIC WORKS

LEGEND

APPROVED

DIRECTOR OF PUBLIC WORKS

DATE

REVISION

STD. NO.
GEN-2
SHEET 1 OF 2

SYMBOLS

TEE
CROSS
BEND
REDUCER
OFFSET BEND
OVER
MANHOLE — MH
FIRE HYDRANT
GATE VALVE
LIGHT STANDARD
TELEPHONE POLE OR POWER POLE
TELEPHONE VAULT — T — DRAW TO SCALE
EDISON VAULT — E — DRAW TO SCALE
POWER POLE GUY WIRE
SIGN — Sign
STREET LIGHT
EXISTING FENCE
TRAFFIC SIGNAL — TS

UTILITY SERVICE SYMBOLS AND LATERALS

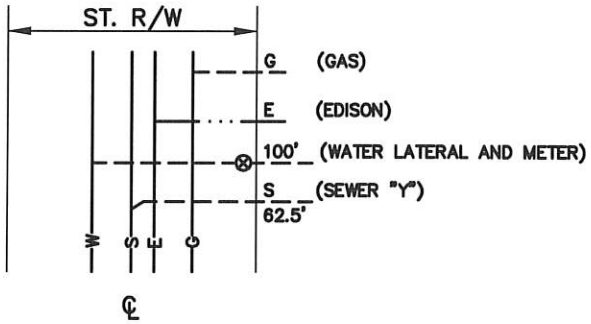

CITY OF SOUTH GATE
INCORPORATED JAN 20, 1923

CITY OF SOUTH GATE
DEPARTMENT OF PUBLIC WORKS

LEGEND

APPROVED
DIRECTOR OF PUBLIC WORKS
8/26/21
DATE

REVISION

STD. NO.
GEN-2
SHEET 2 OF 2

WATER SYSTEM

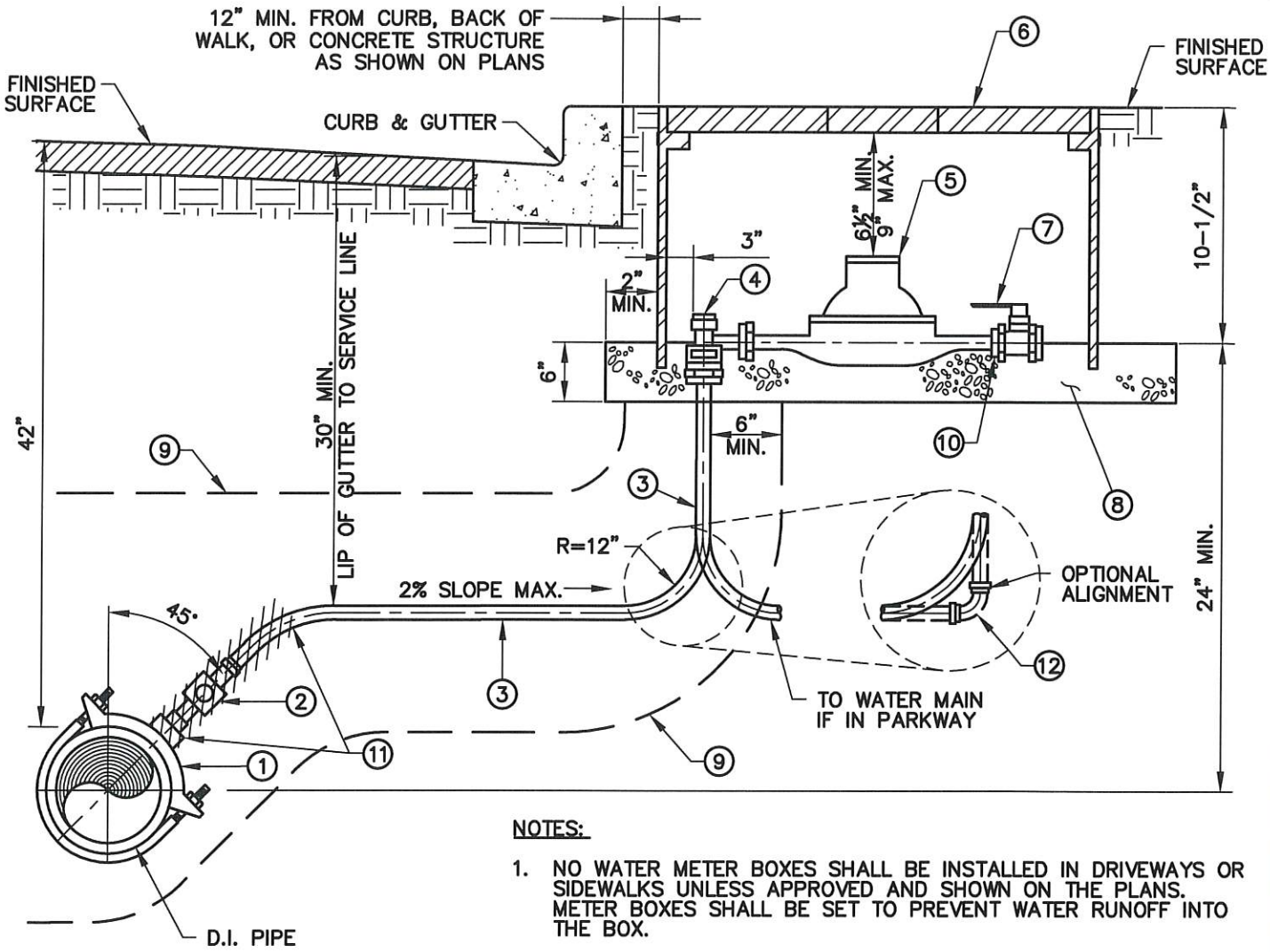

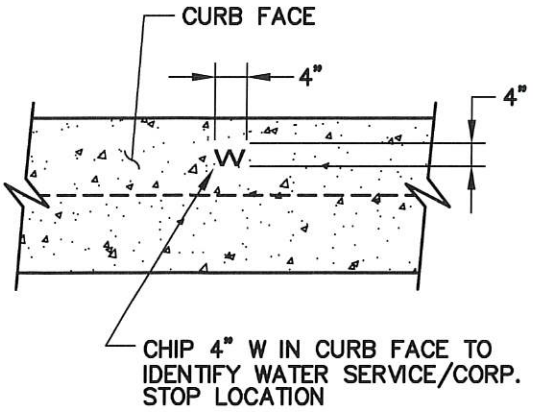

NOTES:

1. NO WATER METER BOXES SHALL BE INSTALLED IN DRIVEWAYS OR SIDEWALKS UNLESS APPROVED AND SHOWN ON THE PLANS. METER BOXES SHALL BE SET TO PREVENT WATER RUNOFF INTO THE BOX.
2. NO SERVICES CLOSER THAN 24 INCHES TO PIPE BELL.
3. TAPS SHALL BE MADE AT LEAST 24 INCHES FROM ANY OTHER TAP OR COUPLING.
4. INSTALL CORP. STOP WITH KEY ON THE SIDE IN OPEN POSITION.
5. SERVICE SADDLE AND CORP. STOP SHALL BE IPS (AWWA) THREAD.
6. A TRAFFIC LOAD RATING COVER SHALL BE USED IN AREAS WITHOUT CURB, IN AREAS WITH ROLLED CURB, OR WHERE THE METER IS LOCATED WITHIN 5 FEET OF THE BCR, ECR, OR A DRIVEWAY APPROACH.
7. CORP. STOP, FITTINGS, AND SERVICE LINE WITHIN 3 FEET OF SERVICE SADDLE SHALL BE COATED WITH 20 MIL MIN. PIPE WRAP TAPE PER ITEM 11 ON SHEET 2.
8. FLATTENING COPPER PIPE TO MAKE THE RADIUS IS NOT ALLOWED.

CITY OF SOUTH GATE INCORPORATED JAN 20, 1923	CITY OF SOUTH GATE DEPARTMENT OF PUBLIC WORKS	3/4 AND 1-INCH WATER SERVICE INSTALLATION	
	APPROVED DIRECTOR OF PUBLIC WORKS	8/26/21 DATE	REVISION
			STD. NO. WD-1 SHEET 1 OF 2

ITEM	DESCRIPTION	SPECIFICATION
1	SERVICE SADDLE	STRAP TO BE DOUBLE STRAP S.S.
2	1" BRONZE BALL VALVE INSULATED CORP. STOP	I.P. X C.T.S. COMPRESSION
3	COPPER TUBING	1" TYPE K, SOFT (ONE PIECE ONLY, NO SPLICES)
4	1" ANGLE METER STOP (BALL VALVE)	1" C.T.S. COMPRESSION X METER SWIVEL NUT AND LOCKWING W/ 1/8" THICK CLOTH INSERTED IN GASKET
5	WATER METER AND TRANSMITTER	3/4" OR 1" (SUPPLIED BY CITY)
6	WATER METER BOX AND LID	15 1/2" X 25" X 12" METER BOX, H20 LOADING
7	BRONZE BALL VALVE	1" I.P. X C.T.S. COMPRESSION
8	WATER METER BOX PAD	CRUSHED ROCK AS SHOWN
9	TRENCH WITH SAND ENVELOPE	IMPORTED WITH SE > 30, 12" MIN. & 24" MAX. TRENCH WIDTH
10	METER ADAPTOR OR BALL VALVE COUPLING	METER NUT X 1" I.P.S.
11	TAPE WRAP A DISTANCE OF 3 FEET FROM & INCLUDING INSULATED CORP. STOP	20 MIL MIN.
12	90° COPPER ELBOW (OPTIONAL)	1" C.T.S.

NOTES:

1. ALL MATERIALS SHALL MEET ANSI/AWWA C800, NSF 61, AND NSF 372 STANDARDS.
2. ITEMS 7 AND 10 MAY BE A COMBINATION METER COUPLING AND BALL VALVE ASSEMBLY WITH HANDLE.

CITY OF SOUTH GATE
INCORPORATED JAN 20, 1923

CITY OF SOUTH GATE
DEPARTMENT OF PUBLIC WORKS

3/4 AND 1-INCH WATER SERVICE INSTALLATION

APPROVED

DIRECTOR OF PUBLIC WORKS

8/26/21
DATE

REVISION

STD. NO.
WD-1

SHEET 2 OF 2

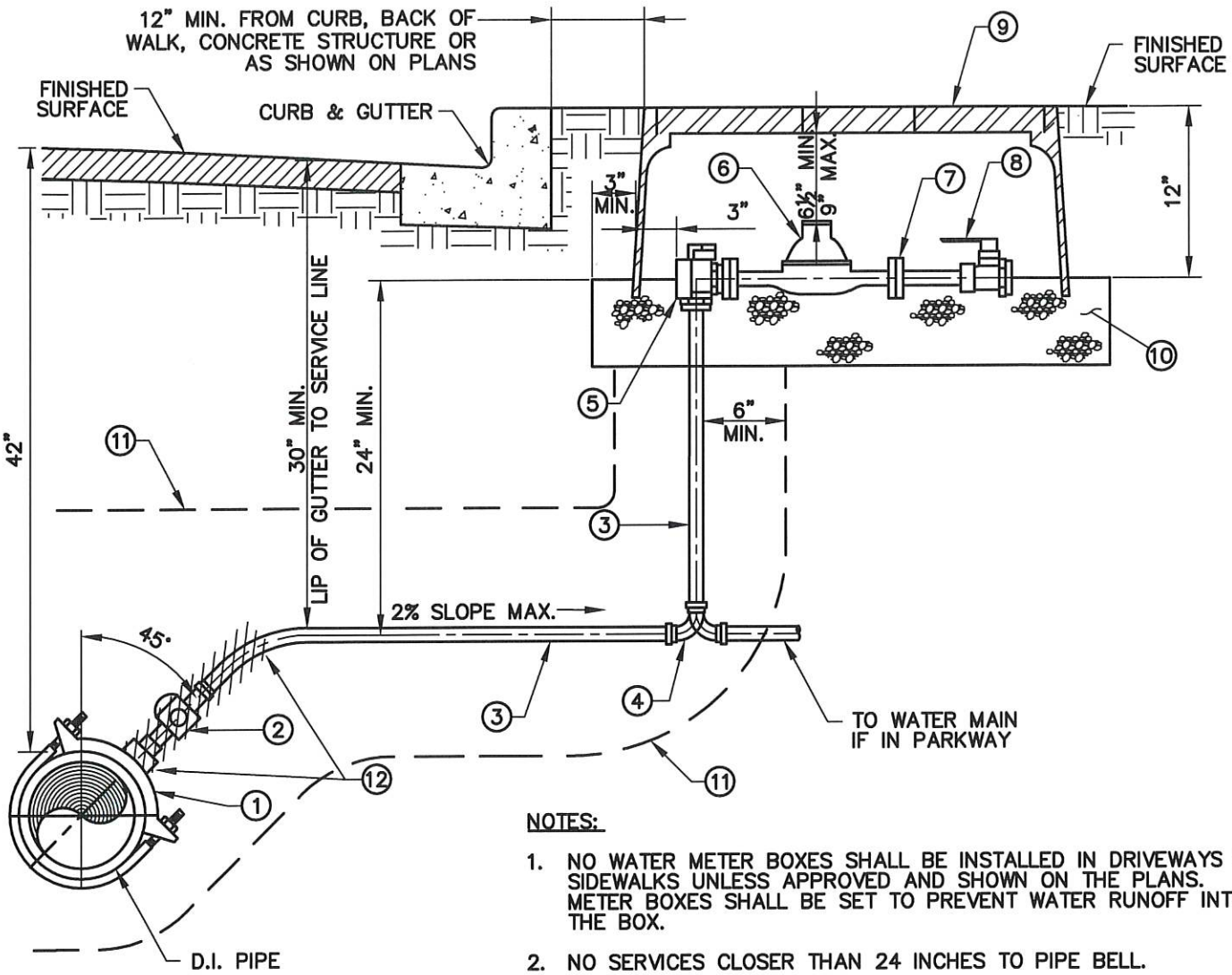

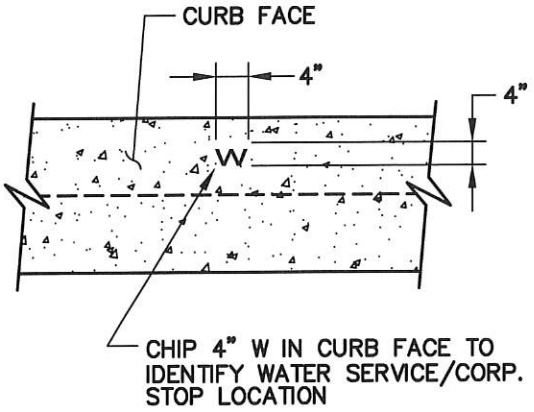

NOTES:

1. NO WATER METER BOXES SHALL BE INSTALLED IN DRIVEWAYS OR SIDEWALKS UNLESS APPROVED AND SHOWN ON THE PLANS. METER BOXES SHALL BE SET TO PREVENT WATER RUNOFF INTO THE BOX.
2. NO SERVICES CLOSER THAN 24 INCHES TO PIPE BELL.
3. TAPS SHALL BE MADE AT LEAST 24 INCHES FROM ANY OTHER TAP OR COUPLING.
4. INSTALL CORP. STOP WITH KEY ON THE SIDE IN OPEN POSITION.
5. SERVICE SADDLE AND CORP. STOP SHALL BE IPS (AWWA) THREAD.
6. A TRAFFIC LOAD RATING COVER SHALL BE USED IN AREAS WITHOUT CURB, IN AREAS WITH ROLLED CURB, OR WHERE THE METER IS LOCATED WITHIN 5 FEET OF THE BCR, ECR, OR A DRIVEWAY APPROACH.
7. CORP. STOP, FITTINGS, AND SERVICE LINE WITHIN 3 FEET OF SERVICE SADDLE SHALL BE COATED WITH 20 MIL MIN. PIPE WRAP TAPE PER ITEM 12 ON SHEET 2.
8. FLATTENING COPPER PIPE TO MAKE THE RADIUS IS NOT ALLOWED.

CITY OF SOUTH GATE DEPARTMENT OF PUBLIC WORKS	**1 1/2 AND 2-INCH WATER SERVICE INSTALLATION**		
APPROVED DIRECTOR OF PUBLIC WORKS	8/26/21 DATE	REVISION	STD. NO. **WD-2** SHEET 1 OF 2

ITEM	DESCRIPTION	SPECIFICATION
1	SERVICE SADDLE	STRAP TO BE DOUBLE STRAP S.S.
2	2" BRONZE BALL VALVE INSULATED CORP. STOP	2" I.P. X C.T.S. COMPRESSION
3	COPPER TUBING	2" TYPE K, SOFT (ONE PIECE ONLY, NO BENDS, UNLESS COMPRESSION ELBOW IS USED)
4	90° COPPER ELBOW	2" C.T.S.
5	2" ANGLE METER STOP (BALL VALVE)	2" C.T.S. COMPRESSION X METER SWIVEL NUT AND LOCKWING W/ 1/8" THICK, CLOTH REINFORCED NEOPRENE INSERTED IN GASKET
6	WATER METER AND TRANSMITTER	1 1/2" OR 2" FLG (SUPPLIED BY CITY)
7	BRONZE WATER METER FLANGE, SLOT DRILLED	2" F.I.P. THREADS W/ 1/8" THICK CLOTH INSERT DROP IN GASKET
8	BRONZE BALL VALVE	2" F.I.P. X F.I.P.
9	WATER METER BOX AND LID	19" X 32" X 12" METER BOX, H20 LOADING
10	WATER METER BOX PAD	CRUSHED ROCK AS SHOWN
11	TRENCH WITH SAND ENVELOPE	IMPORTED WITH SE > 30, 12" MIN. & 24" MAX. TRENCH WIDTH
12	TAPE WRAP A DISTANCE OF 3 FEET FROM & INCLUDING INSULATED CORP. STOP	20 MIL MIN.

NOTES:

1. ALL MATERIALS SHALL MEET ANSI/AWWA C800, NSF 61, AND NSF 372 STANDARDS.
2. ITEMS 7 AND 8 MAY BE A COMBINATION SLOT DRILLED METER FLANGE AND VALVE ASSEMBLY WITH HANDLE.

CITY OF SOUTH GATE
INCORPORATED JAN 20, 1923

CITY OF SOUTH GATE
DEPARTMENT OF PUBLIC WORKS

1 1/2 AND 2-INCH WATER SERVICE INSTALLATION

APPROVED

DIRECTOR OF PUBLIC WORKS

8/26/21
DATE

REVISION

STD. NO.
WD-2

SHEET 2 OF 2

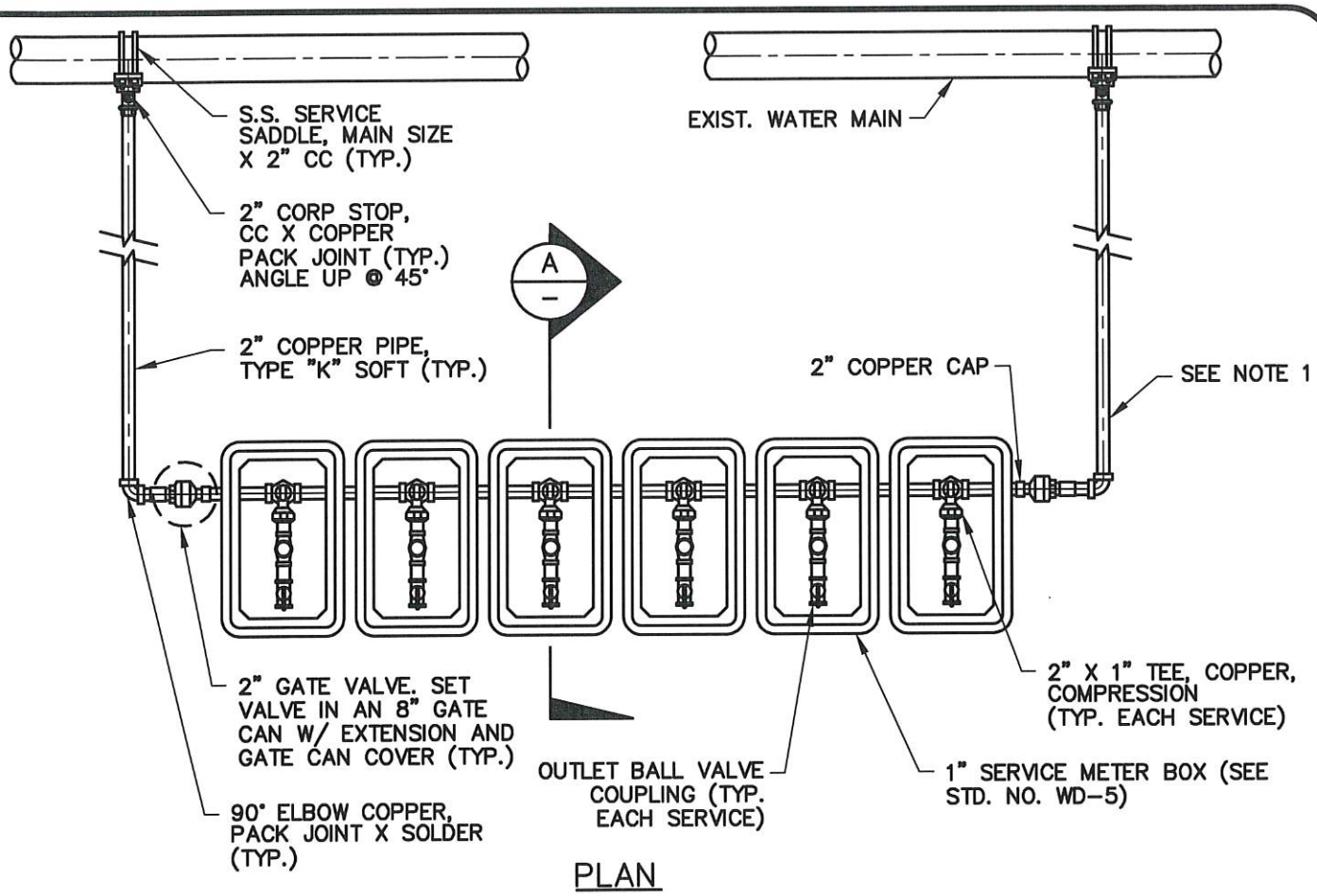

PLAN

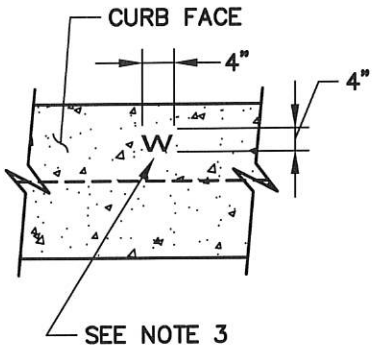

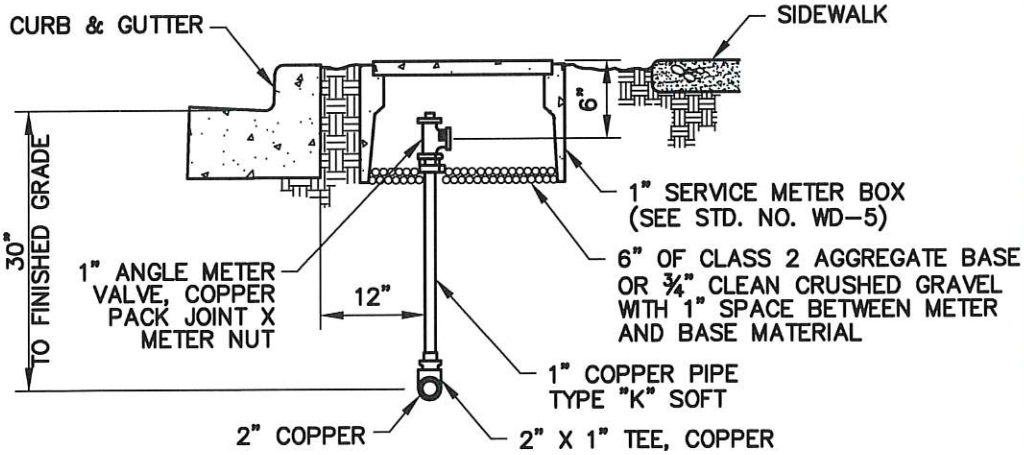

SECTION A

NOTES:

1. TWO-WAY FEED SHALL BE PROVIDED WHERE FOUR OR MORE SERVICES ARE TO BE INSTALLED. A MAXIMUM OF TEN SERVICES MAY BE INSTALLED ON ONE BATTERY.
2. SEE STD. NO. WD-1 FOR METER DETAILS.
3. CHIP 4" W IN CURB FACE TO IDENTIFY WATER SERVICE/CORP. STOP LOCATION.

CITY OF SOUTH GATE INCORPORATED JAN 20, 1923	CITY OF SOUTH GATE DEPARTMENT OF PUBLIC WORKS	3/4 AND 1-INCH GROUPED DOMESTIC SERVICE CONNECTION	
	APPROVED DIRECTOR OF PUBLIC WORKS	8/26/21 DATE	REVISION
			STD. NO. WD-3 SHEET 1 OF 1

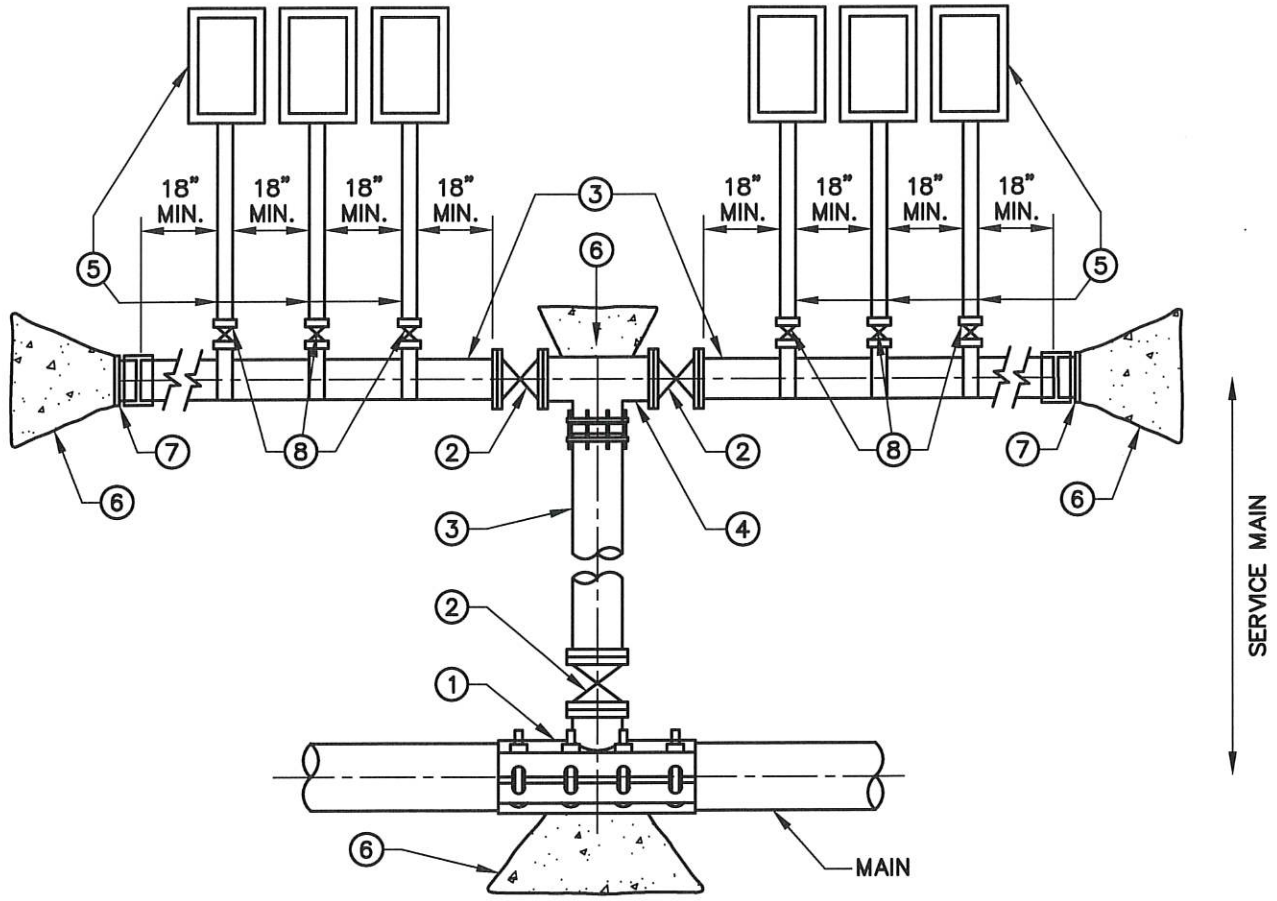

PLAN

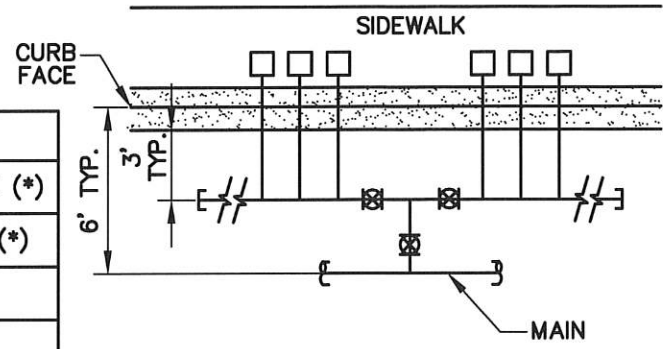

ITEM	DESCRIPTION
1	HOT TAP or FLG TEE – SEE STD. NO. WD–13 / D.I. TEE (*)
2	FLG X FLG OR MJ X FLG RESILIENT WEDGE GATE VALVE (*)
3	D.I. PIPE CLASS 52 (*)
4	D.I. TEE, FLG X FLG X MJ (SHORT BODY MAY BE USED)
5	SERVICE INSTALLATION – SEE STD. NO. WD–2
6	THRUST BLOCK – SEE STD. NO. WD–35
7	D.I. END CAP (*)
8	SIZE BALL VALVE CORP. STOP – SEE STD. NO. WD–2

*NOTE:

SERVICE LINE SIZE TO BE DETERMINED

CITY OF SOUTH GATE
INCORPORATED JAN 20, 1923

CITY OF SOUTH GATE
DEPARTMENT OF PUBLIC WORKS

MANIFOLD ASSEMBLY FOR 2-INCH AND LARGER SERVICES

APPROVED

DIRECTOR OF PUBLIC WORKS

8/26/21
DATE

REVISION

STD. NO.
WD-4

SHEET 1 OF 1

20,800# LOAD RATED

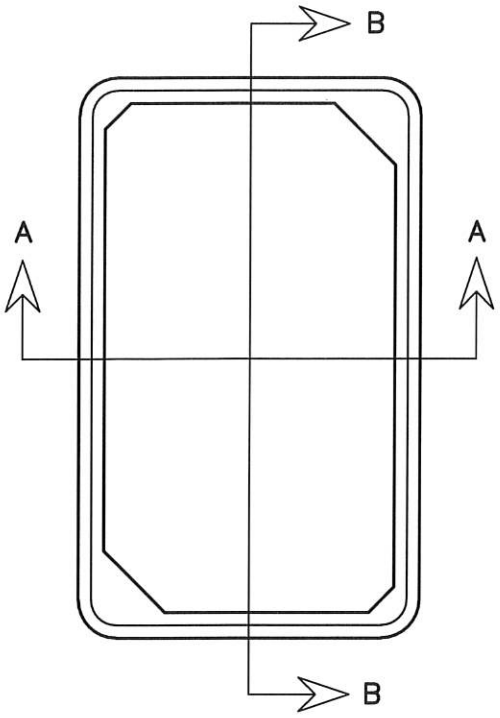

TOP VIEW

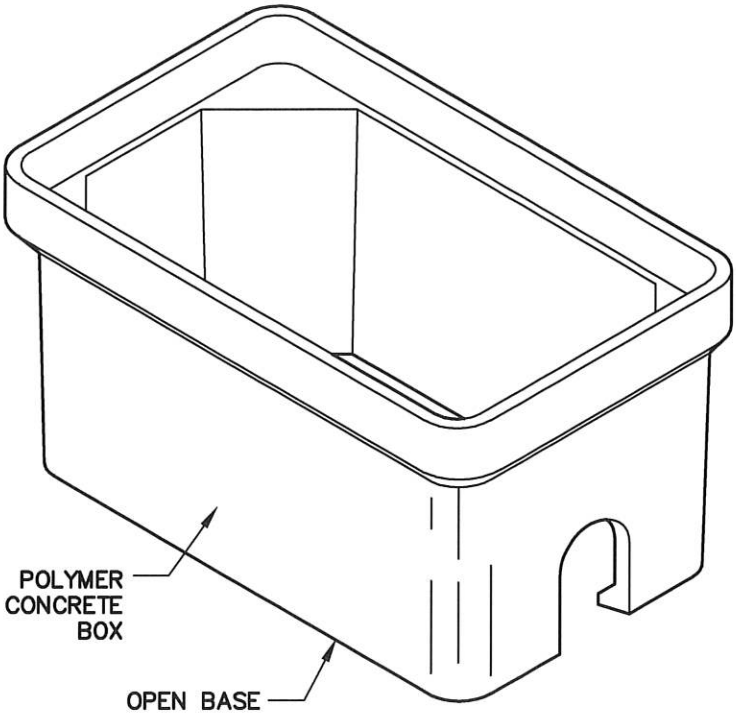

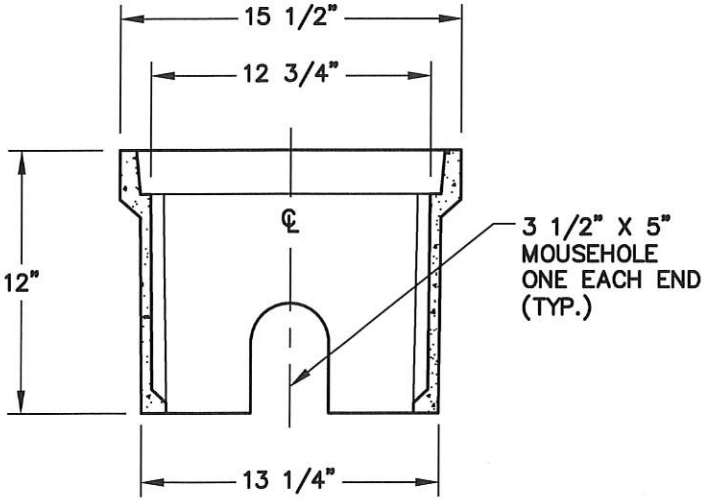

SECTION A–A

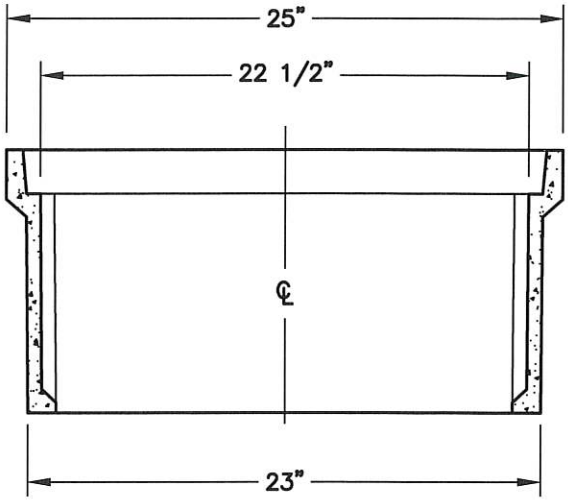

SECTION B–B

CITY OF SOUTH GATE DEPARTMENT OF PUBLIC WORKS	3/4 AND 1-INCH METER BOX		
APPROVED DIRECTOR OF PUBLIC WORKS	8/26/21 DATE	REVISION	STD. NO. **WD-5** SHEET 1 OF 1

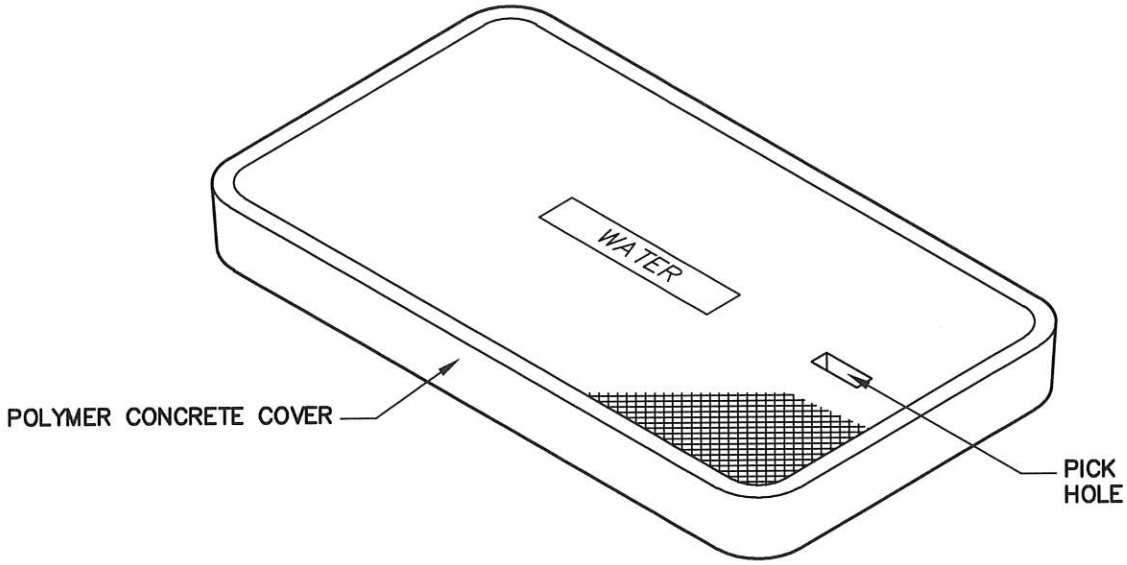

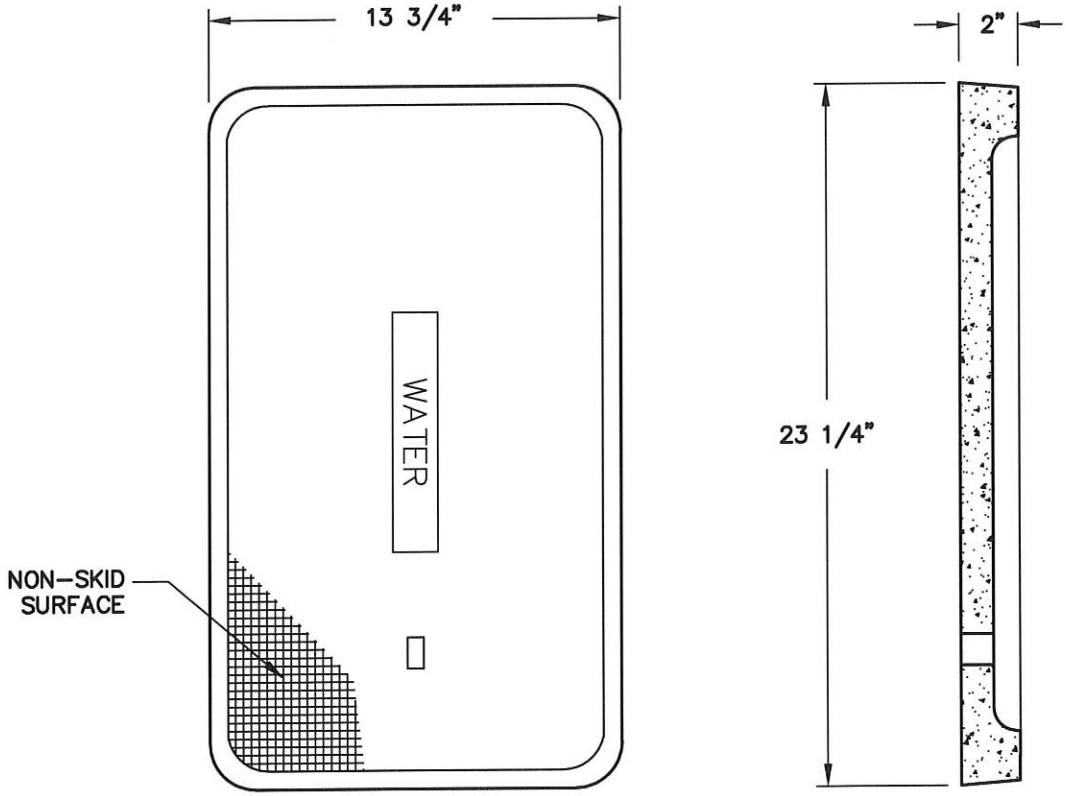

CITY OF SOUTH GATE DEPARTMENT OF PUBLIC WORKS	3/4 AND 1-INCH METER BOX LID		
APPROVED DIRECTOR OF PUBLIC WORKS	8/26/21 DATE	REVISION	STD. NO. **WD-6** SHEET 1 OF 1

20,800# LOAD RATED

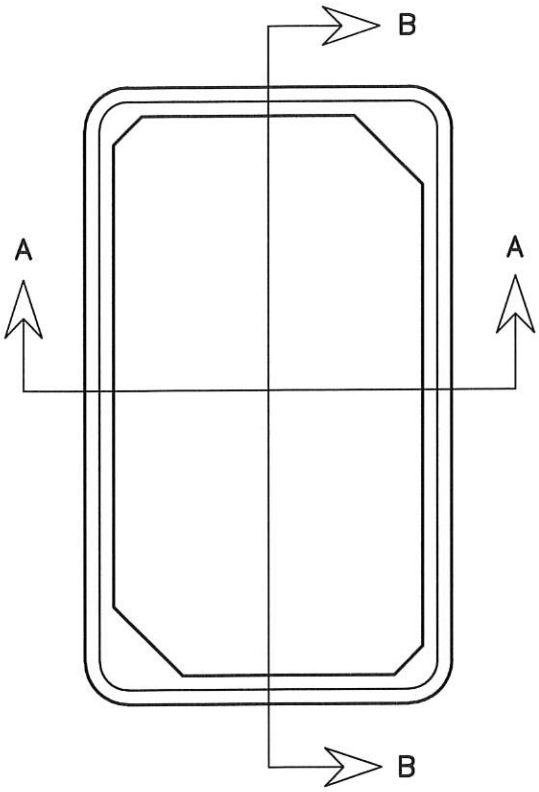

TOP VIEW

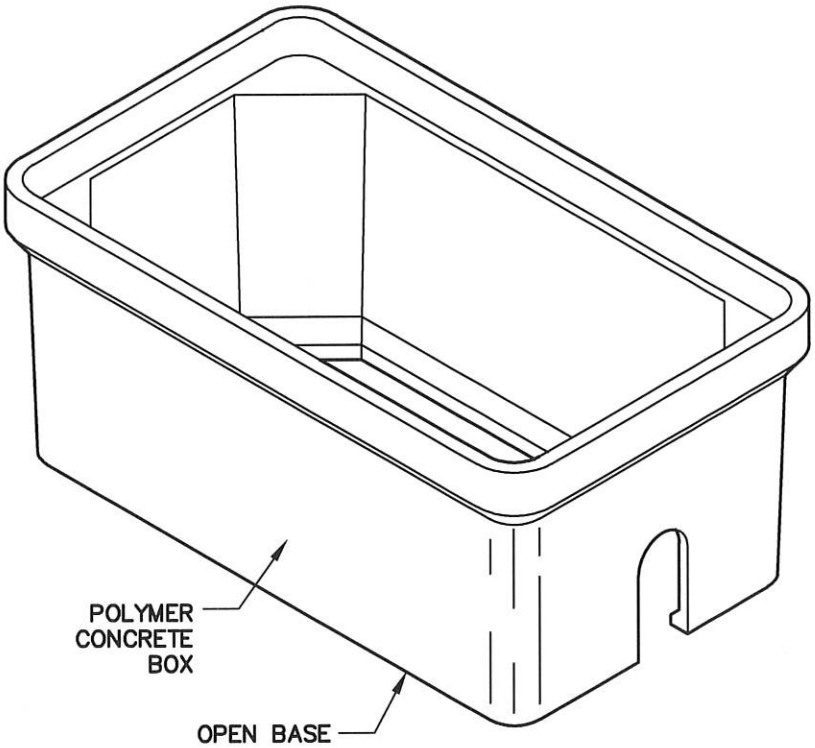

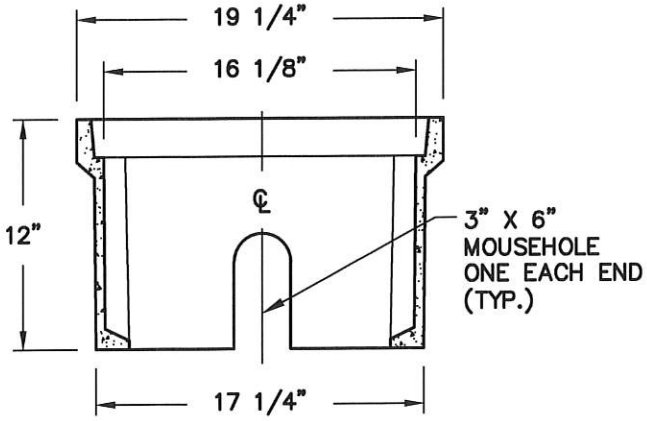

SECTION A–A

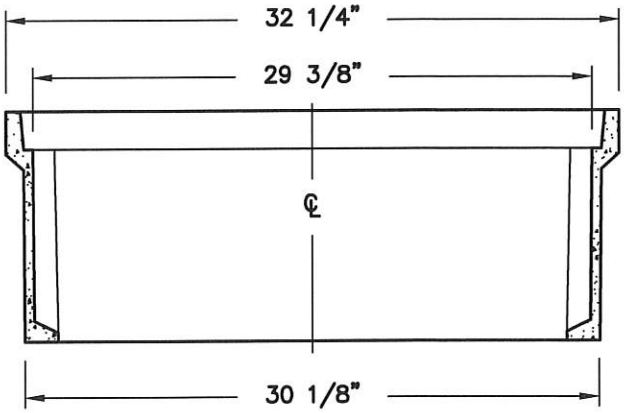

SECTION B–B

CITY OF SOUTH GATE DEPARTMENT OF PUBLIC WORKS	1 1/2 AND 2-INCH METER BOX		
APPROVED DIRECTOR OF PUBLIC WORKS	8/26/21 DATE	REVISION	STD. NO. **WD-7** SHEET 1 OF 1

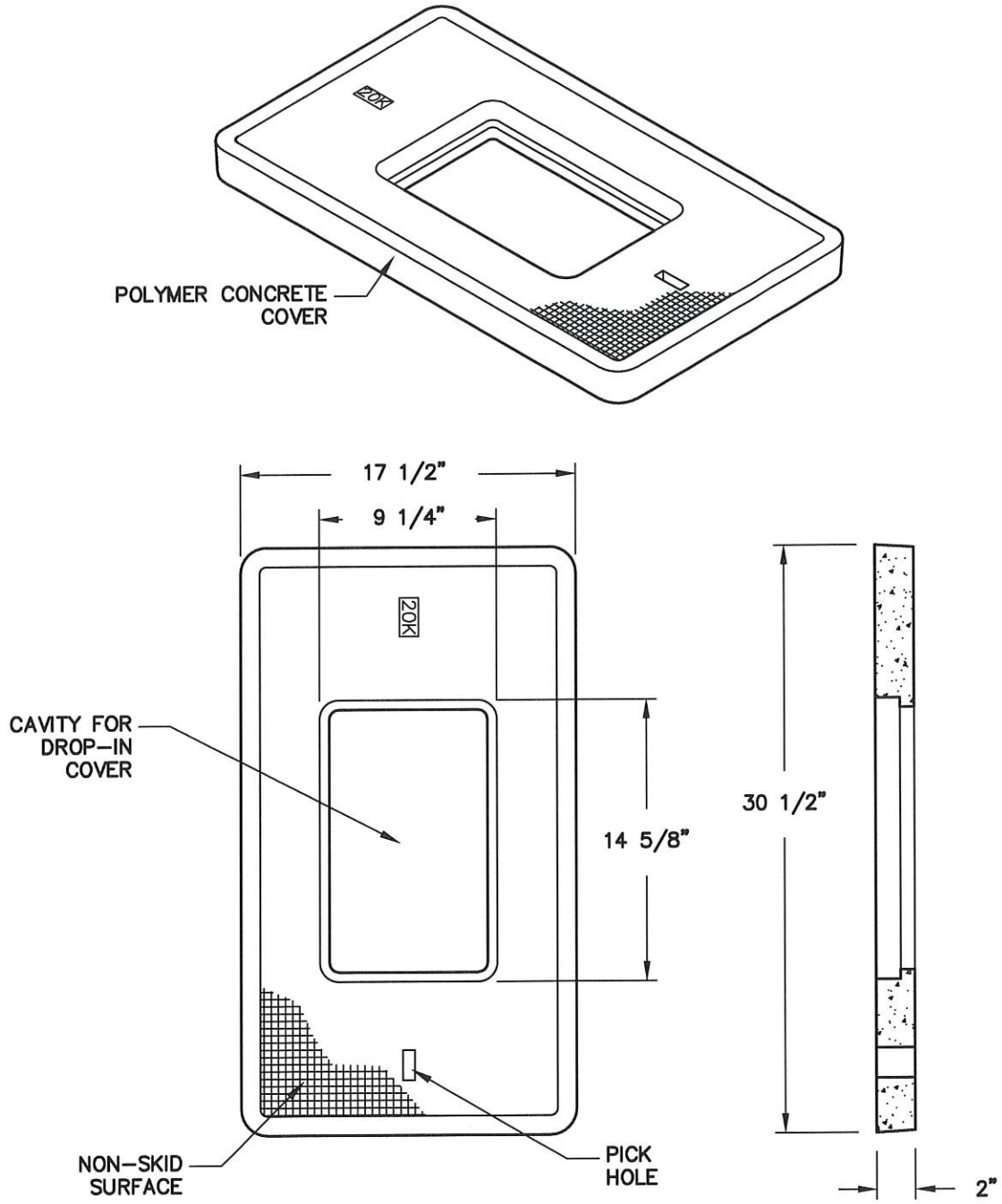

(ACCEPTS DROP-IN READ LID)

CITY OF SOUTH GATE INCORPORATED JAN 20, 1923	CITY OF SOUTH GATE DEPARTMENT OF PUBLIC WORKS	1 1/2 AND 2-INCH METER BOX LID	
	APPROVED DIRECTOR OF PUBLIC WORKS	8/26/21 DATE	REVISION STD. NO. WD-8 SHEET 1 OF 1

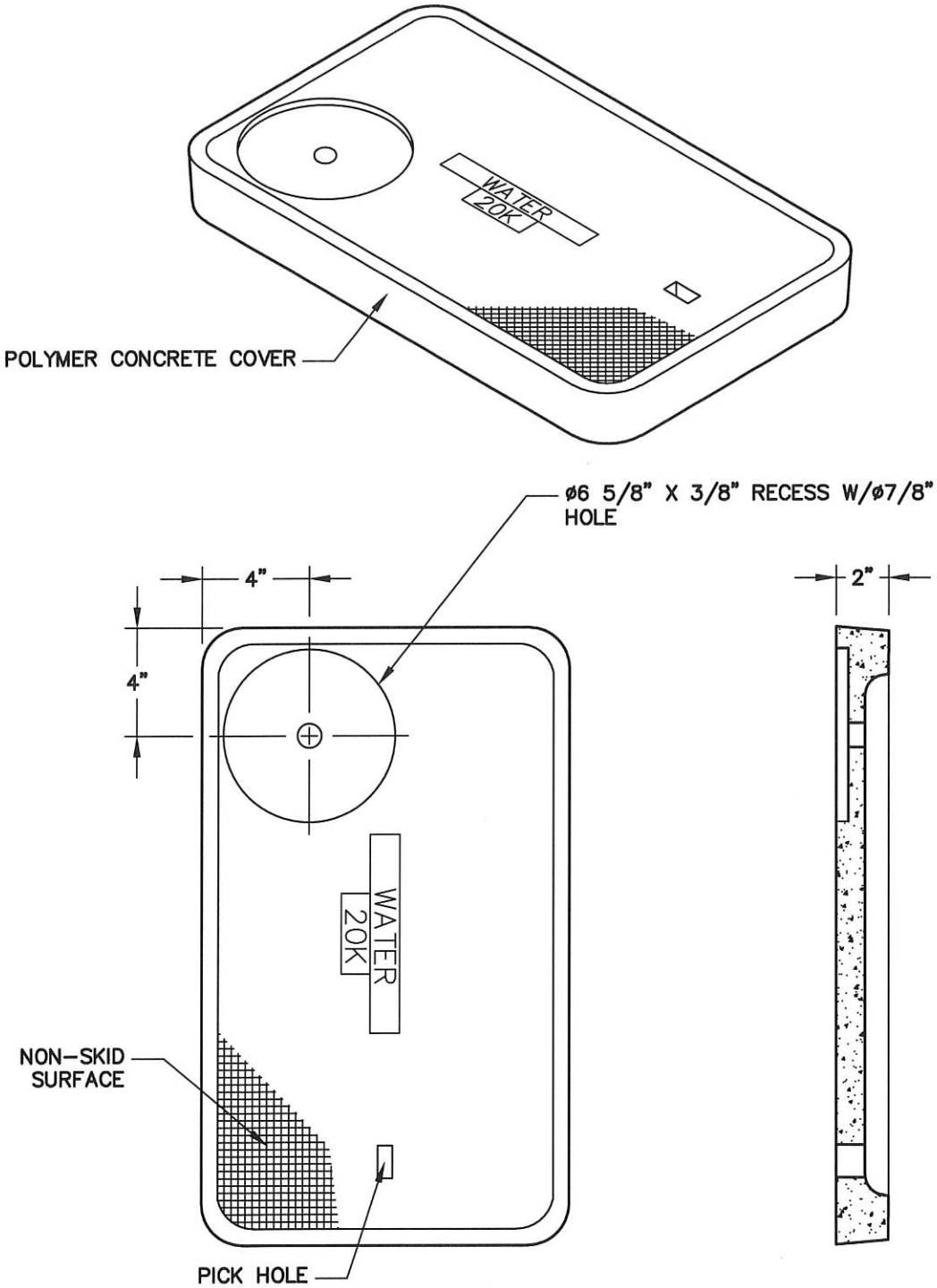

CITY OF SOUTH GATE DEPARTMENT OF PUBLIC WORKS	**ANTENNA MOUNT DETAIL FOR 3/4 - 2-INCH METER BOX LID**		
APPROVED DIRECTOR OF PUBLIC WORKS	8/26/21 DATE	REVISION	STD. NO. **WD-9** SHEET 1 OF 1

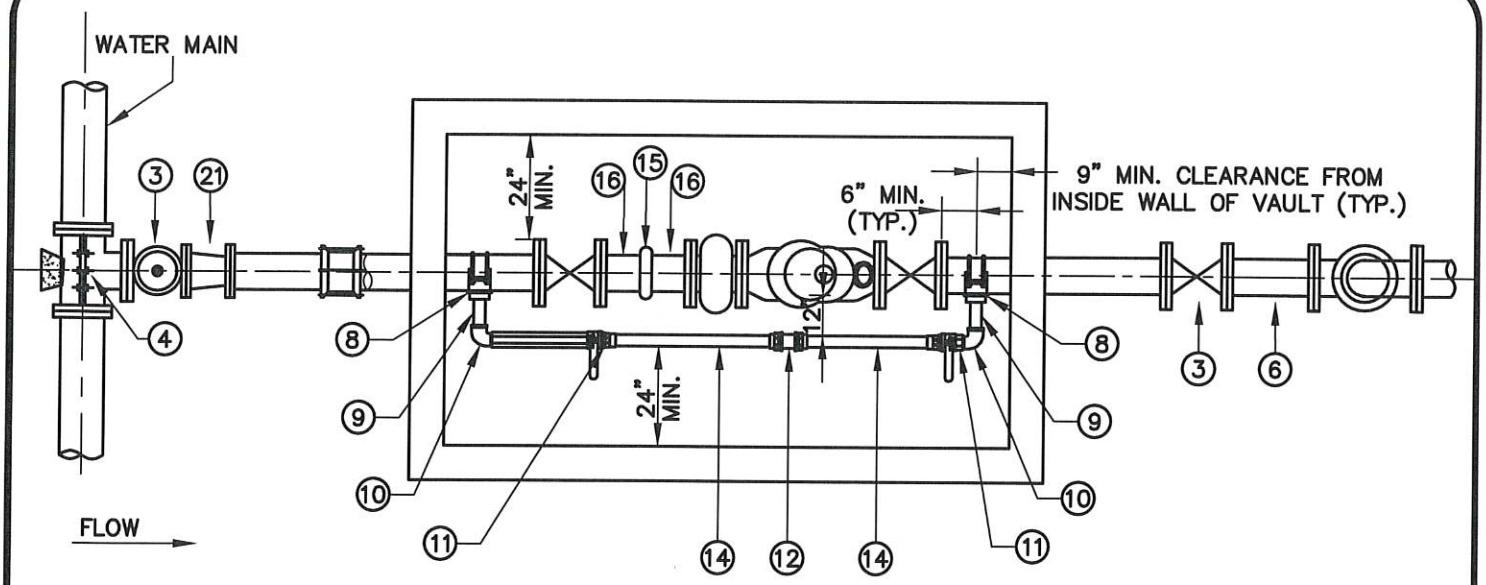

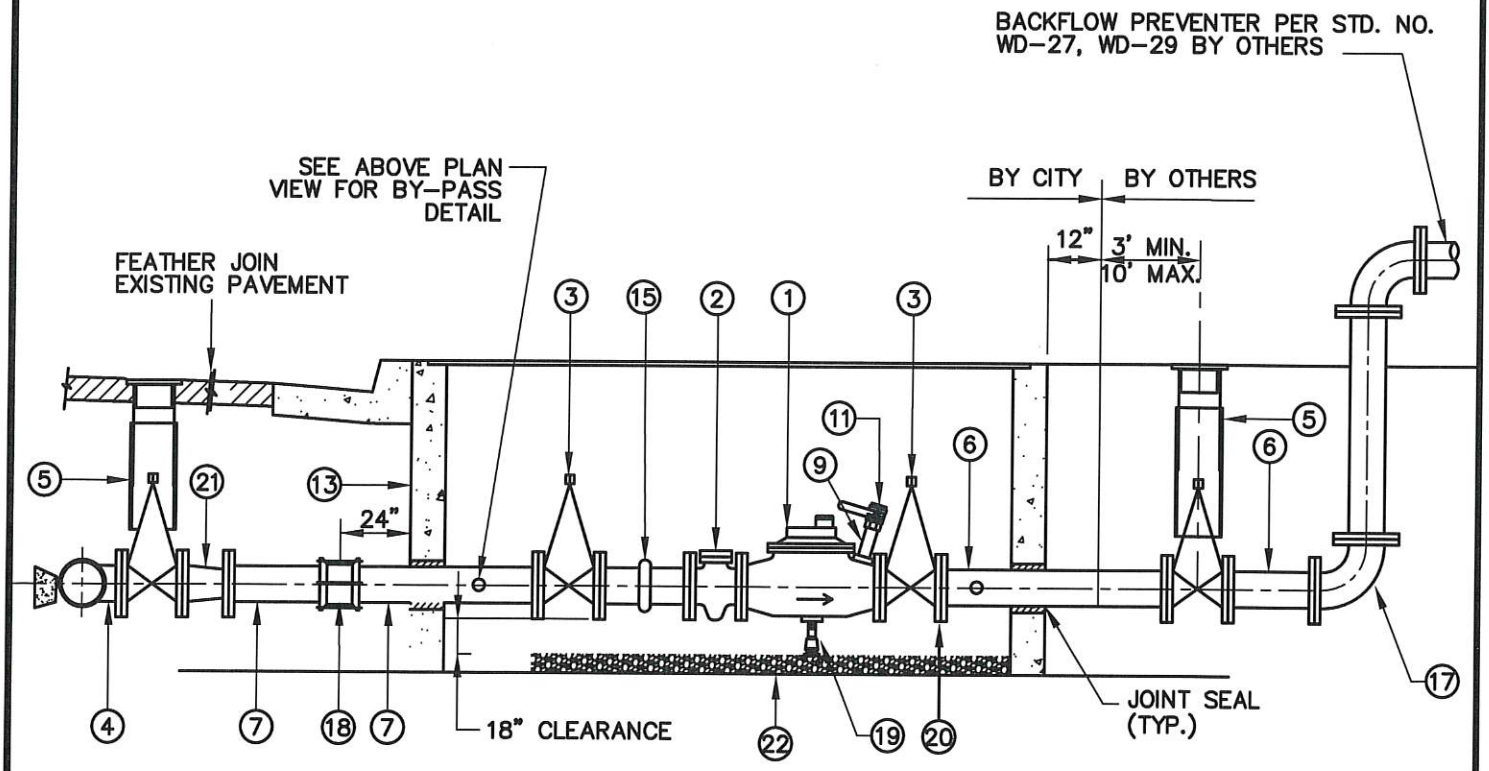

ELEVATION

CITY OF SOUTH GATE
INCORPORATED JAN 20, 1923

CITY OF SOUTH GATE
DEPARTMENT OF PUBLIC WORKS

3-INCH AND LARGER WATER METER SERVICE INSTALLATION

APPROVED

DIRECTOR OF PUBLIC WORKS

8/26/21
DATE

REVISION

STD. NO.
WD-10

SHEET 1 OF 6

ITEM	DESCRIPTION
1	TURBINE METER WITH TEST PORT AND TRANSMITTER
2	BRONZE STRAINER
3	GATE VALVE, FLG W/2" OPERATING NUT
4	TAPPING SLEEVE AND GATE VALVE PER STD. NO. WD-13. USE FLG TEE FOR NEW CONSTRUCTION
5	GATE VALVE CAN ASSEMBLY PER STD. NO. WD-16
6	DUCTILE IRON PIPE, FLG X FLG
7	DUCTILE IRON PIPE, FLG X P.E. (CUT TO FIT)
8	STAINLESS STEEL SERVICE SADDLE FOR Di PIPE, W/2" FEMALE I.P. THREADS
9	2" BRASS NIPPLE, 6" LONG (2" MIP X FIP CORP. STOP)
10	2" STREET ELL, BRASS
11	2" FULL PORT BALL VALVE, BRASS BODY
12	COMPRESSION COUPLING BRASS
13	PRECAST CONCRETE VAULT WITH SPRING ASSISTED HINGED DIAMOND PLATE STEEL COVER WITH ANTENNA MOUNT AND RECESSED LOCKING HASP. PROVIDE 6" X 12" HINGED READING LID INSTALLED OVER METER REGISTER.
14	2" COPPER PIPE
15	GROOVED END COUPLING
16	DUCTILE IRON PIPE SPOOL, FLG X GROOVE END
17	DUCTILE IRON 90° BEND, FLG
18	FLEX COUPLING ADAPTOR
19	PIPE SUPPORT PER STD. NO. WD-43
20	BOLT FLANGE INSULATING COUPLING
21	SIZE X 3" REDUCER (FOR 3" SERVICE ONLY)
22	MIN. 6" DEEP GRAVEL BED

NOTES:

1. ALL GATE VALVES SHALL BE RESILIENT WEDGE, NON-RISING STEM, FUSION EPOXY LINED AND COATED.
2. CONCRETE VAULT SHALL BE SIZED TO HOUSE METER INSTALLATION WITH MINIMUM CLEARANCES SHOWN IN SHEET 1.
3. VAULT COVER SHALL CONFORM TO H10 PARKWAY LOADING AND H20 IN TRAFFIC AREAS.
4. TORSION ASSISTED VAULT LIDS TO BE PROVIDED WITH ANTENNA MOUNT.

CITY OF SOUTH GATE
INCORPORATED JAN 20, 1923

CITY OF SOUTH GATE
DEPARTMENT OF PUBLIC WORKS

3-INCH AND LARGER WATER METER SERVICE INSTALLATION

APPROVED

DIRECTOR OF PUBLIC WORKS

8/26/21
DATE

REVISION

STD. NO.
WD-10

SHEET 2 OF 6

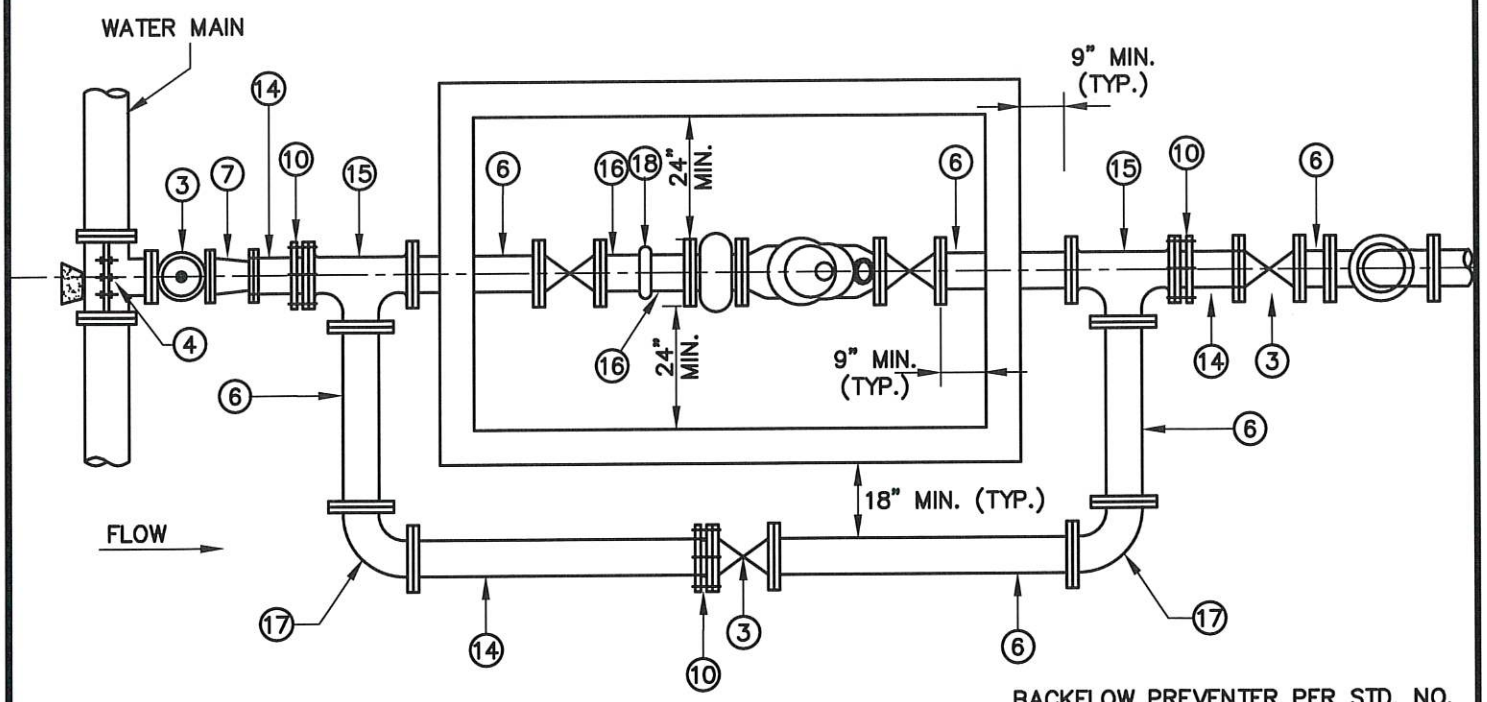

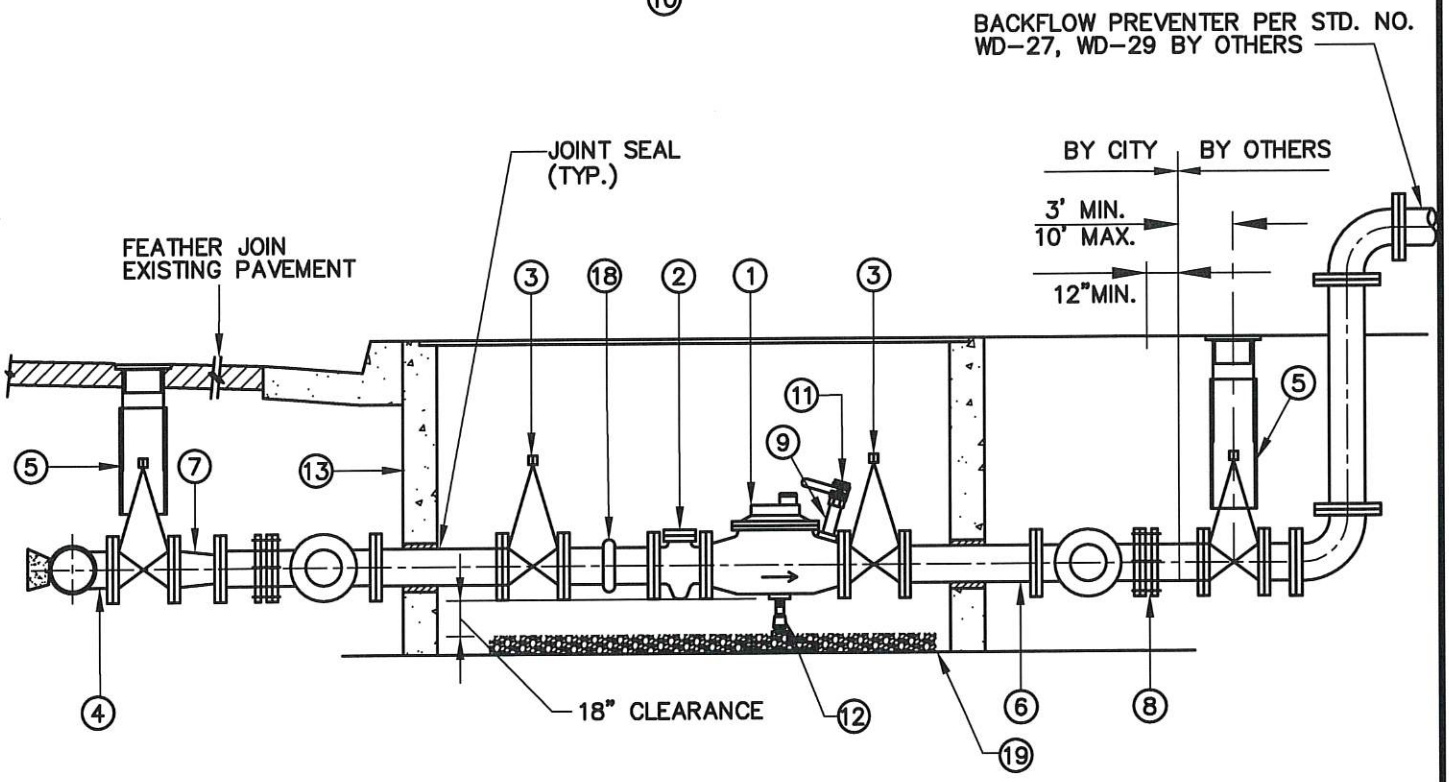

ELEVATION

CITY OF SOUTH GATE DEPARTMENT OF PUBLIC WORKS	**3-INCH AND LARGER WATER METER SERVICE INSTALLATION**		
APPROVED DIRECTOR OF PUBLIC WORKS	8/26/21 DATE	REVISION	STD. NO. **WD-10** SHEET 3 OF 6

ITEM	DESCRIPTION
1	TURBINE METER WITH TEST PORT AND TRANSMITTER
2	BRONZE STRAINER
3	GATE VALVE, FLG W/2" OPERATING NUT
4	TAPPING SLEEVE AND GATE VALVE PER STD. NO. WD-13. USE FLG TEE FOR NEW CONSTRUCTION
5	GATE VALVE CAN ASSEMBLY PER STD. NO. WD-16
6	DUCTILE IRON PIPE, FLG X FLG
7	SIZE X 3" REDUCER (FOR 3" SERVICE ONLY)
8	BOLT FLANGE INSULATING COUPLING
9	2" BRASS NIPPLE, 6" LONG (2" MIP X FIP CORP. STOP)
10	FLANGE COUPLING ADAPTOR
11	2" FULL PORT BALL VALVE, BRASS BODY
12	PIPE SUPPORT PER STD. NO. WD-43
13	PRECAST CONCRETE VAULT WITH SPRING ASSISTED HINGED DIAMOND PLATE STEEL COVER WITH ANTENNA MOUNT AND RECESSED LOCKING HASP. PROVIDE 6" X 12" HINGED READING LID INSTALLED OVER METER REGISTER.
14	DUCTILE IRON PIPE SPOOL, FLG X P.E. (CUT TO FIT)
15	DUCTILE IRON TEE, FLG
16	DUCTILE IRON PIPE SPOOL, FLG X GROOVE END
17	DUCTILE IRON 90° BEND, FLG
18	GROOVED END COUPLING
19	MIN. 6" DEEP GRAVEL BED

NOTES:

1. ALL GATE VALVES SHALL BE RESILIENT WEDGE, NON-RISING STEM, FUSION EPOXY LINED AND COATED.
2. CONCRETE VAULT SHALL BE SIZED TO HOUSE METER INSTALLATION WITH MINIMUM CLEARANCES SHOWN IN SHEET 3.
3. VAULT COVER SHALL CONFORM TO H10 PARKWAY LOADING AND H20 IN TRAFFIC AREAS.
4. TORSION ASSISTED VAULT LIDS TO BE PROVIDED WITH ANTENNA MOUNT.

CITY OF SOUTH GATE
INCORPORATED JAN 20, 1923

CITY OF SOUTH GATE
DEPARTMENT OF PUBLIC WORKS

3-INCH AND LARGER WATER METER SERVICE INSTALLATION

APPROVED

DIRECTOR OF PUBLIC WORKS

8/26/21
DATE

REVISION

STD. NO.
WD-10

SHEET 4 OF 6

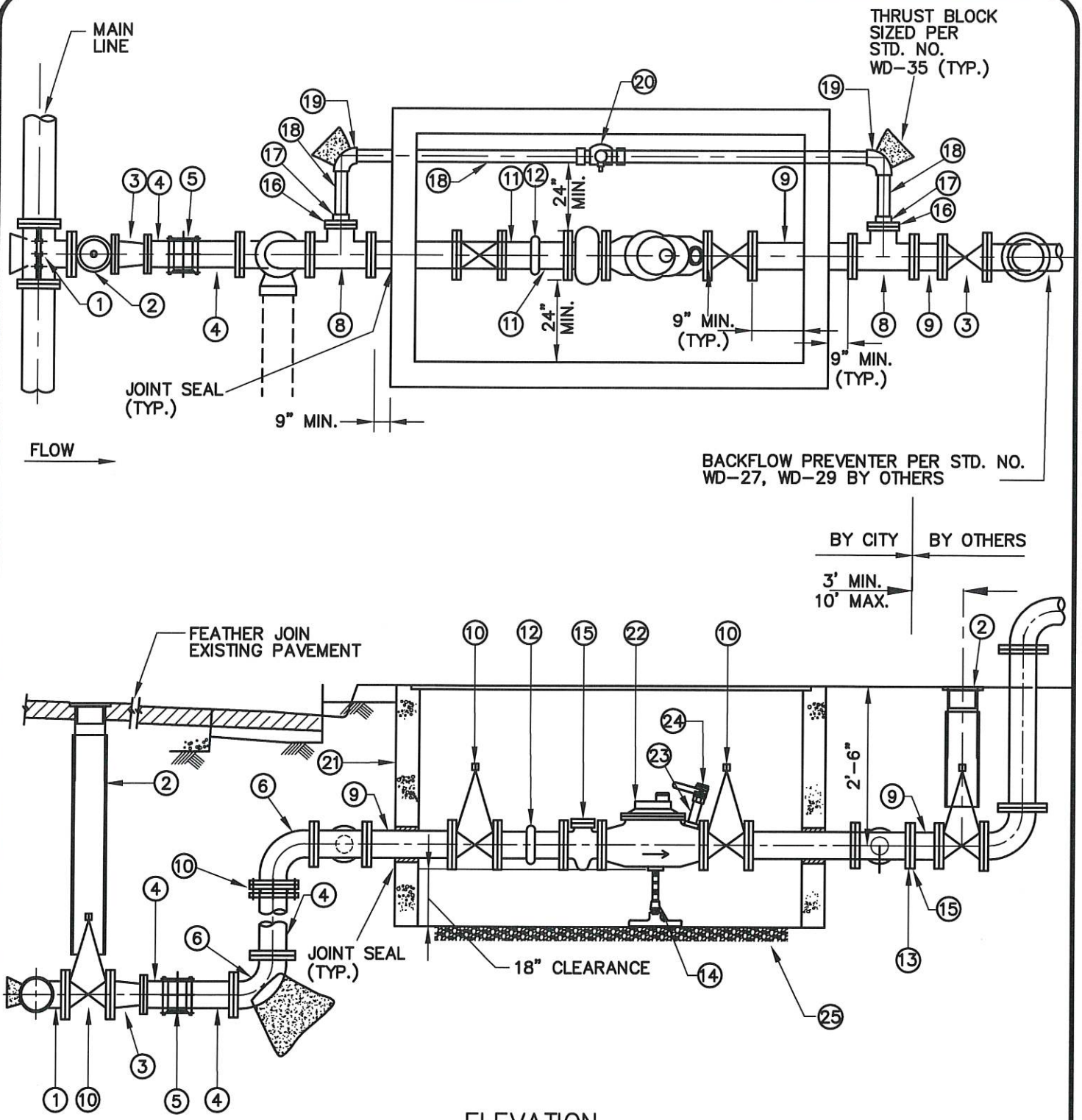

ELEVATION

CITY OF SOUTH GATE DEPARTMENT OF PUBLIC WORKS	**3-INCH AND LARGER WATER METER SERVICE INSTALLATION**		
APPROVED DIRECTOR OF PUBLIC WORKS	8/20/21 DATE	REVISION	STD. NO. **WD-10** SHEET 5 OF 6

ITEM	DESCRIPTION
1	TAPPING SLEEVE AND GATE VALVE PER STD. NO. WD-13. USE FLG TEE FOR NEW CONSTRUCTION
2	GATE VALVE CAN ASSEMBLY PER STD. NO. WD-16
3	SIZE X 3" REDUCER (FOR 3" SERVICE ONLY)
4	DUCTILE IRON PIPE SPOOL, FLG X P.E. (CUT TO FIT)
5	FLEXIBLE COUPLING
6	DUCTILE IRON 90° ELL FLG X FLG
7	FLEX COUPLING ADAPTOR
8	DUCTILE IRON TEE, FLG
9	DUCTILE IRON FLG X FLG SPOOL
10	RW GATE VALVE FLG X FLG W/NRS STEM
11	FLG X GROOVED-END DUCTILE IRON SPOOL, 4" MIN. LENGTH
12	GROOVED-END COUPLING
13	BOLT FLANGE INSULATING COUPLING
14	PIPE SUPPORT PER STD. NO. WD-43
15	BRONZE STRAINER
16	METER SIZE BRONZE COMPANION FLANGED WITH THREADED 2" OUTLET
17	BRASS ADAPTER - MIP X COMPRESSION
18	2" COPPER BYPASS
19	BRASS COMPRESSION 90° ELBOW
20	BRONZE BALL VALVE WITH LOCKING WING - FIP X FIP
21	PRECAST CONCRETE VAULT WITH SPRING ASSISTED HINGED DIAMOND PLATE STEEL COVER WITH ANTENNA MOUNT AND RECESSED LOCKING HASP. PROVIDE 6" X 12" HINGED READING LID INSTALLED OVER METER REGISTER.
22	TURBINE METER WITH TEST PORT AND TRANSMITTER
23	2" BRASS NIPPLE, 6" LONG (2" MIP X FIP CORP. STOP)
24	2" FULL PORT BALL VALVE, BRASS BODY
25	MIN. 6" DEEP GRAVEL BED

NOTES:

1. ALL GATE VALVES SHALL BE RESILIENT WEDGE, NON-RISING STEM, FUSION EPOXY LINED AND COATED.
2. CONCRETE VAULT SHALL BE SIZED TO HOUSE METER INSTALLATION WITH MINIMUM CLEARANCES SHOWN IN SHEET 5.
3. VAULT COVER SHALL CONFORM TO H10 PARKWAY LOADING AND H20 IN TRAFFIC AREAS.
4. TORSION ASSISTED VAULT LIDS TO BE PROVIDED WITH ANTENNA MOUNT.

CITY OF SOUTH GATE
INCORPORATED JAN 20, 1923

CITY OF SOUTH GATE
DEPARTMENT OF PUBLIC WORKS

3-INCH AND LARGER WATER METER SERVICE INSTALLATION

APPROVED
DIRECTOR OF PUBLIC WORKS

8/26/21
DATE

REVISION

STD. NO.
WD-10

SHEET 6 OF 6

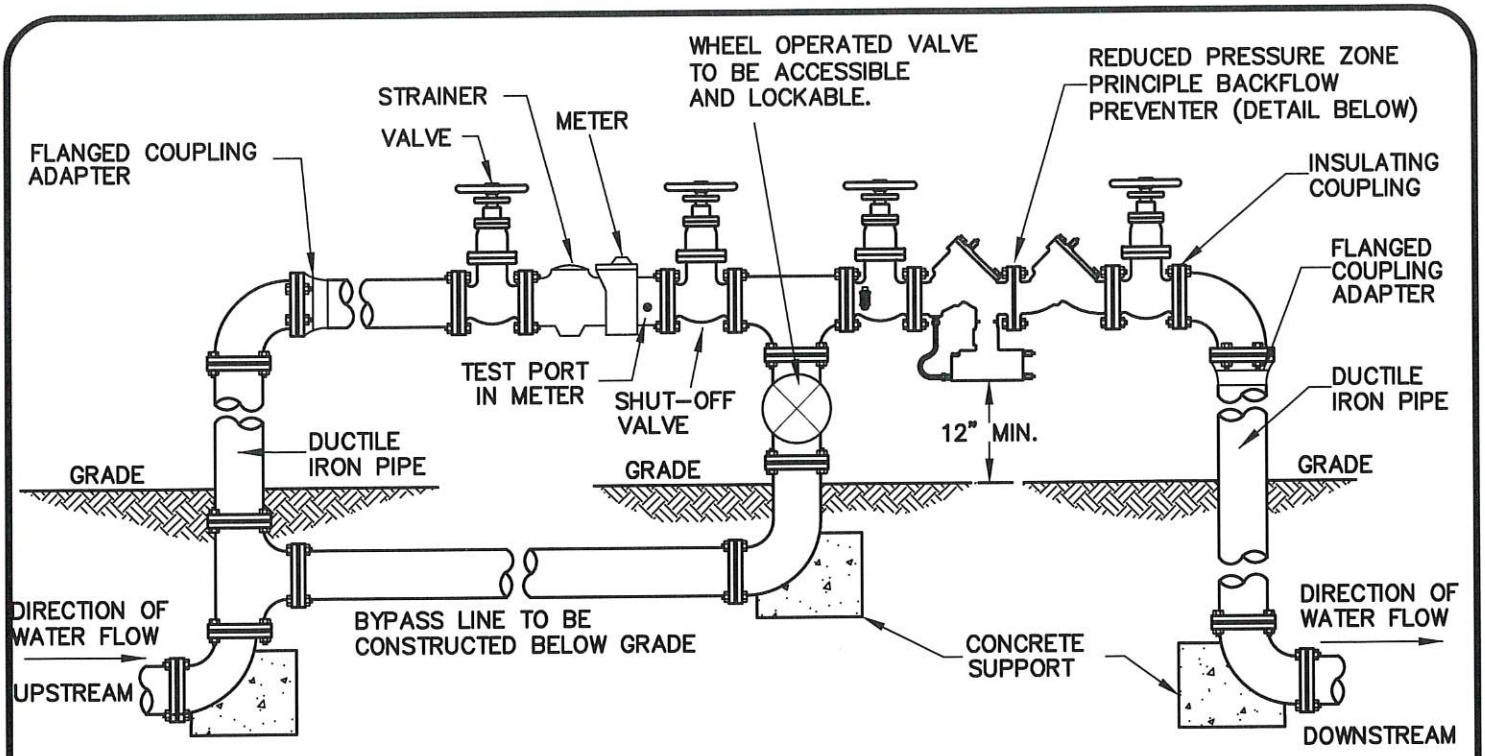

NOTES:

1. ALL DOMESTIC METERS NEED WATER DIVISION APPROVAL.
2. IRRIGATION METERS TO BE APPROVED TURBINE METERS.
3. METERS TO BE INSTALLED ABOVE GROUND.

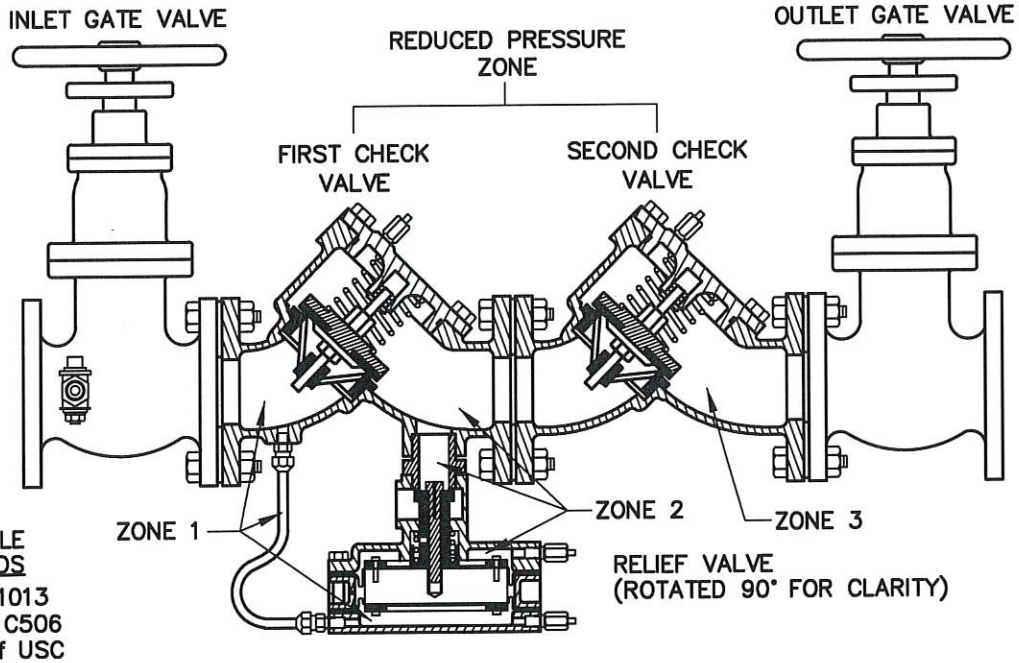

APPLICABLE STANDARDS

A.S.S.E. 1013
A.W.W.A. C506
FCCCHR of USC

CITY OF SOUTH GATE DEPARTMENT OF PUBLIC WORKS	ABOVE GROUND METER ASSEMBLY WITH REDUCED PRESSURE BACKFLOW PREVENTION ASSEMBLY		
APPROVED DIRECTOR OF PUBLIC WORKS	8/26/21 DATE	REVISION	STD. NO. WD-11 SHEET 1 OF 1

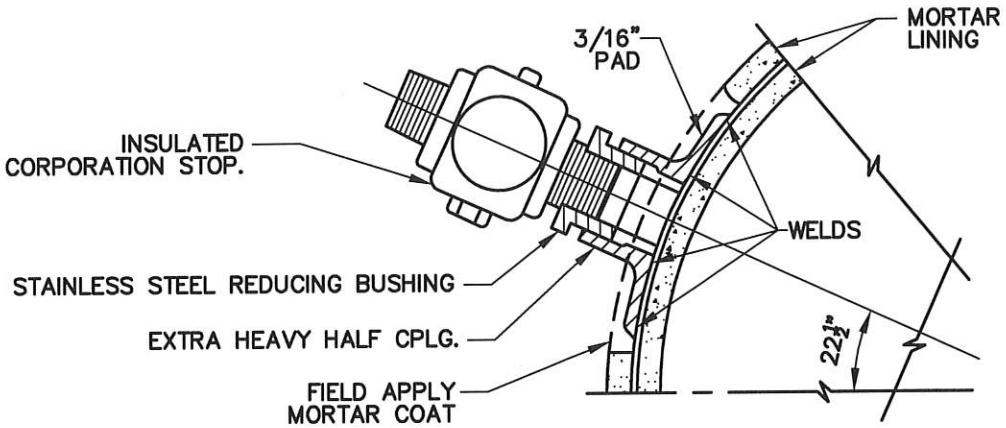

NOTES:

1. THE CEMENT LINED FLANGED NOZZLE IS CUSTOM FABRICATED TO FIT O.D. OF INSIDE STEEL CYLINDER AND CAN BE USED WHEN THE ENCLOSED STEEL CYLINDER PIPE IS 12 OR 10 GAUGE OR MORE IN THICKNESS.
2. THE CONNECTION CONSISTS OF A CEMENT LINED FLANGED NOZZLE (LINING 1/2" OR MORE) WITH CURVED PAD (TO FIT AGAINST STEEL LINER).
3. AFTER CONCRETE HAS BEEN ALL CHIPPED OFF (JUST LARGE ENOUGH FOR PAD) THE NOZZLE IS WELDED TO LINE FIRST, THEN PAD IS WELDED TO THE NOZZLE AND PIPE TO PREVENT FLUID FROM GETTING BETWEEN THE PAD AND THE PIPE. BOLT ON VALVE, COVER ALL EXPOSED AREAS WITH CEMENT AND COMPLETE TAP–IN.
4. TAPE WRAP 3 FEET INCLUDING INSULATED CORP. STOP/OUTLET.

CITY OF SOUTH GATE INCORPORATED JAN 20, 1923	CITY OF SOUTH GATE DEPARTMENT OF PUBLIC WORKS	3/4 - 2-INCH HOT TAPS FOR CEMENT MORTAR LINED STEEL PIPE	
	APPROVED DIRECTOR OF PUBLIC WORKS	8/26/21 DATE	REVISION STD. NO. WD-12 SHEET 1 OF 1

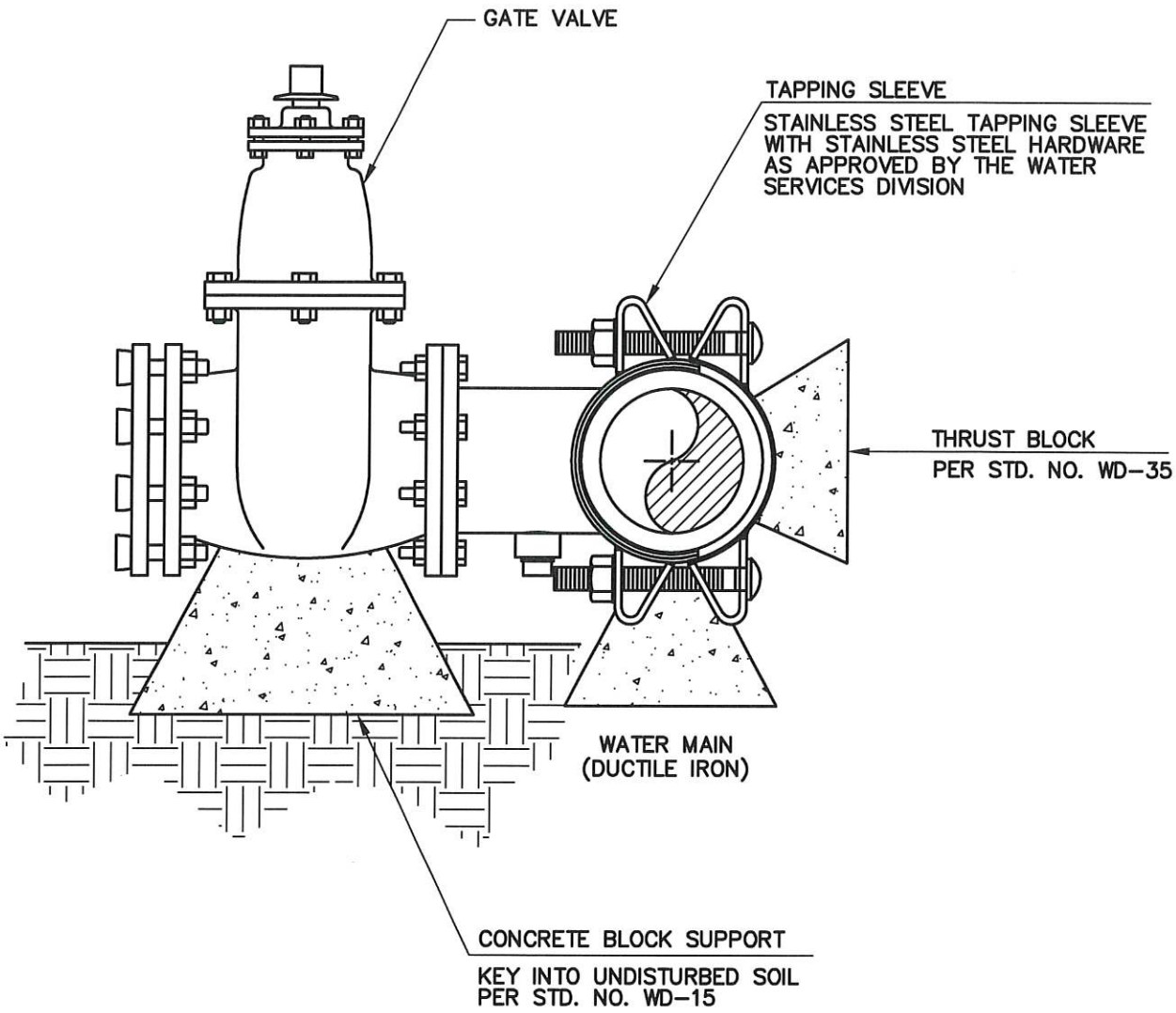

NOTES:

1. TAPPING CUTTER SHALL BE MAXIMUM ALLOWABLE DIAMETER CONSISTENT WITH NOMINAL GATE VALVE SIZE.
2. GATE VALVE SHALL BE RESILIENT WEDGE EPOXY LINED AND COATED TYPE, FLG x M.J., NON-RISING STEM.
3. WRAP EXTERIOR OF VALVE AND ACTUATOR WITH 8 MIL POLYETHYLENE SHEETING AND TAPE.
4. VALVE CAN SHALL BE PER STD. NO. WD-16.

CITY OF SOUTH GATE INCORPORATED JAN 20, 1923	CITY OF SOUTH GATE DEPARTMENT OF PUBLIC WORKS	HOT TAPPING SLEEVE AND GATE VALVE FOR DUCTILE IRON PIPE	
	APPROVED DIRECTOR OF PUBLIC WORKS — DATE 8/26/21	REVISION	STD. NO. WD-13 SHEET 1 OF 1

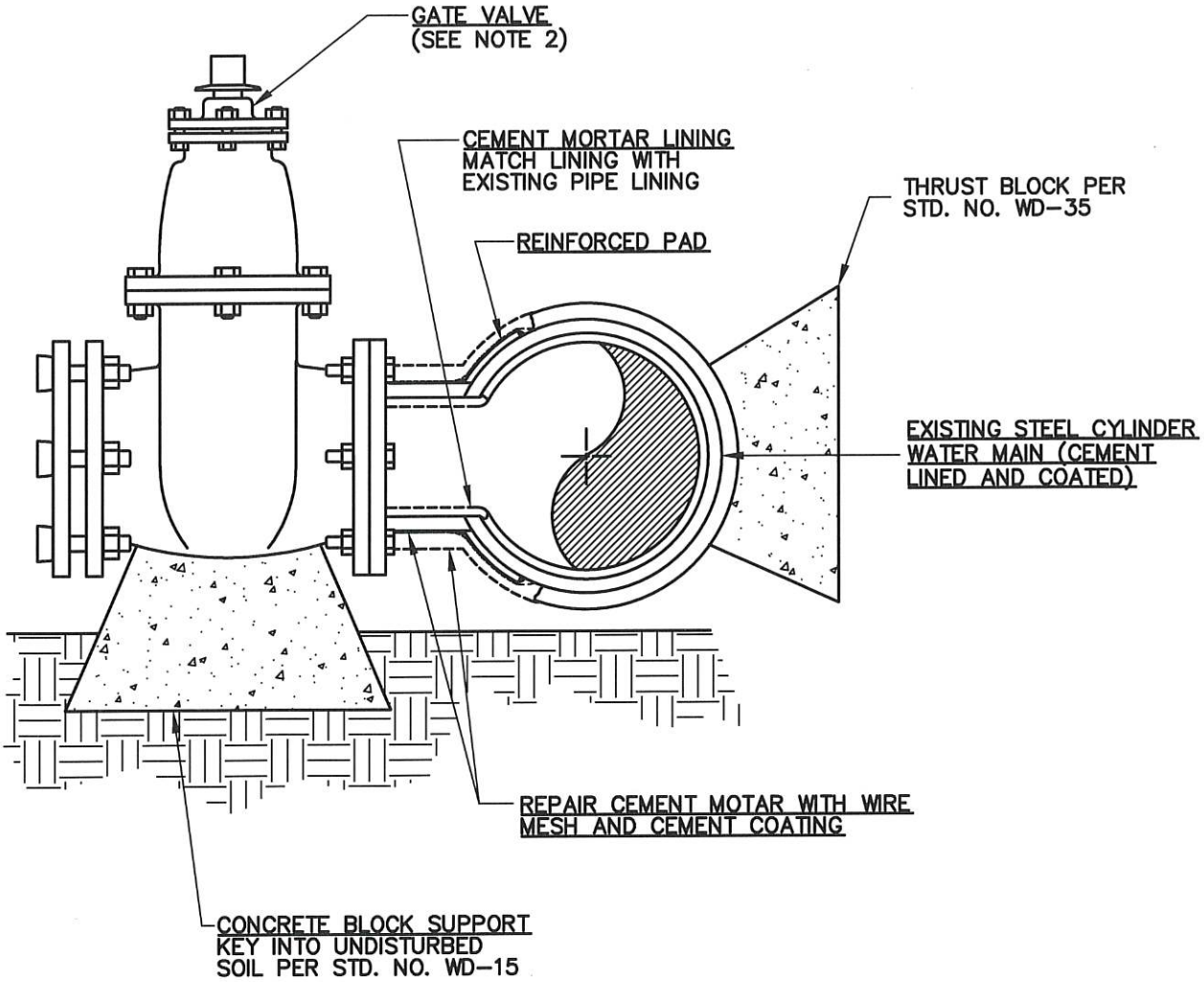

NOTES:

1. CEMENT LINED FLANGED NOZZLE WITH REINFORCING PAD. (CERTIFIED WELDER REQUIRED).
2. GATE VALVES SHALL BE RESILIENT WEDGE EPOXY LINED AND COATED TYPE, NRS FLG x M.J., OR FLG x PUSH-ON.
3. TAPPING CUTTER SHALL BE MAXIMUM ALLOWABLE DIAMETER CONSISTENT WITH NOMINAL GATE VALVE SIZE.
4. MAKE TAP A MINIMUM OF 3' CLEAR OF ANY PIPE JOINT.
5. WRAP EXTERIOR OF VALVE AND ACTUATOR WITH 8 MIL POLYETHYLENE SHEETING AND TAPE.
6. VALVE CAN SHALL BE PER STD. NO. WD-16.

CITY OF SOUTH GATE DEPARTMENT OF PUBLIC WORKS	WELDED TAPPING SLEEVE AND GATE VALVE FOR STEEL CYLINDER PIPE		
APPROVED DIRECTOR OF PUBLIC WORKS	8/26/21 DATE	REVISION	STD. NO. WD-14 SHEET 1 OF 1

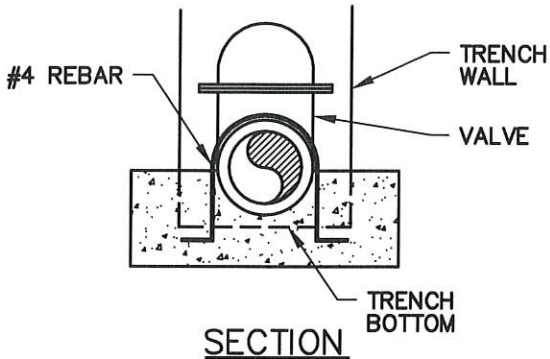

SECTION

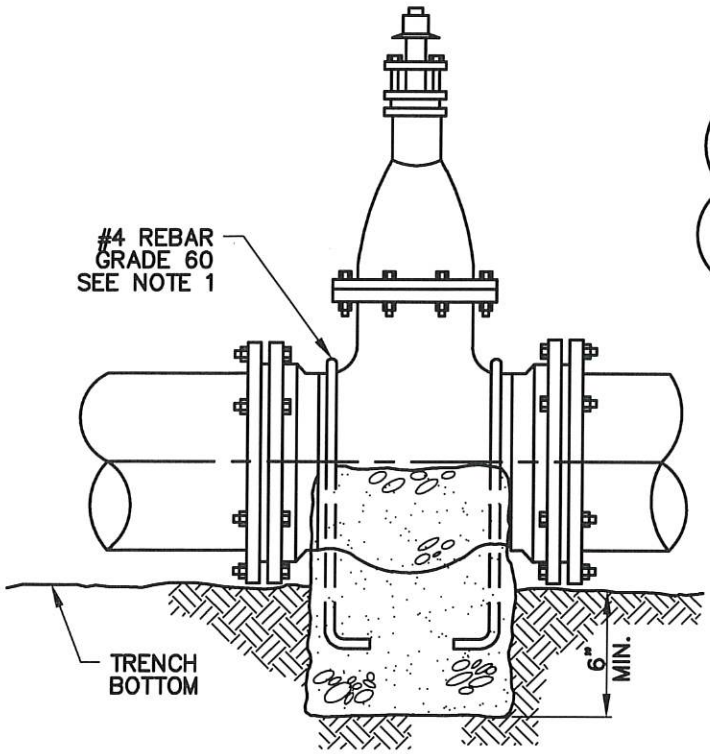

SIDE VIEW

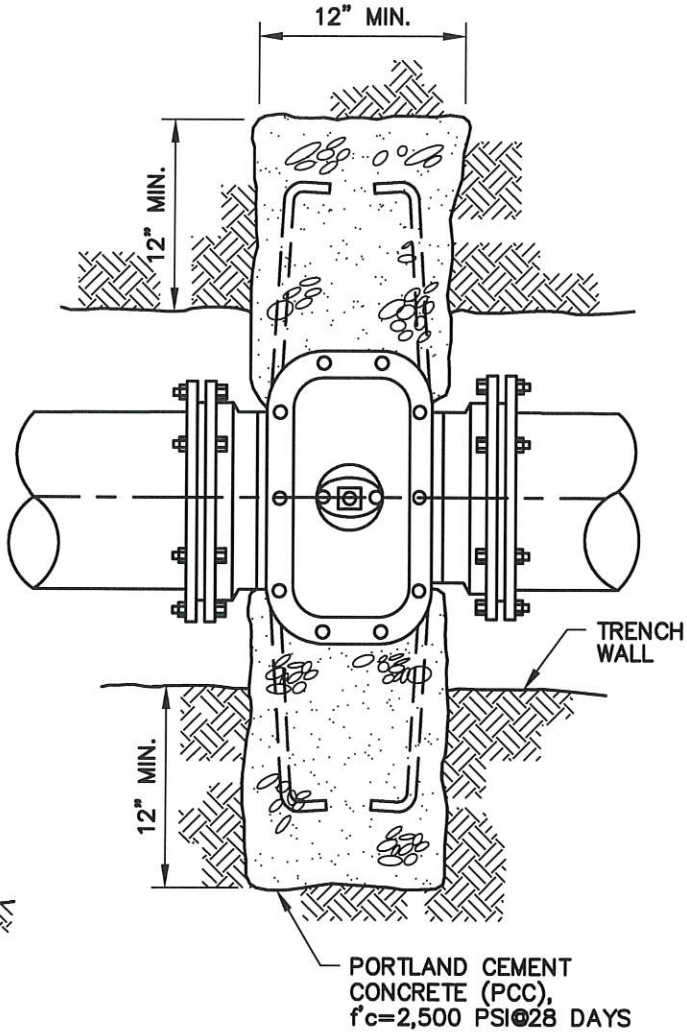

PLAN VIEW

NOTES:

1. ALL ANCHOR RODS ARE TO BE COVERED WITH 80 MILS OF BITUMASTIC COMPOUND.
2. THE ANCHOR BLOCK SHALL BE KEYED NO LESS THAN 12 INCHES INTO UNDISTURBED SOIL OF THE TRENCH WALL AND NO LESS THAN 6 INCHES INTO THE TRENCH BOTTOM.
3. ANCHOR BLOCK REQUIRED ONLY WHEN VALVE IS NOT FLANGED TO A TEE OR CROSS.
4. CONCRETE SHALL BE 2,500 PSI MINIMUM WITH 3-INCHES MINIMUM COVER REBAR. NO CONCRETE SHALL BE POURED ON VALVE OR JOINT.
5. WRAP EXTERIOR OF VALVE, ACTUATOR, AND REBAR WITH 8 MIL POLYETHYLENE SHEETING AND TAPE.
6. VALVE CAN SHALL BE PER STD. NO. WD-16.

CITY OF SOUTH GATE INCORPORATED JAN 20, 1923	CITY OF SOUTH GATE DEPARTMENT OF PUBLIC WORKS	VALVE ANCHOR	
	APPROVED DIRECTOR OF PUBLIC WORKS — DATE 8/26/21	REVISION	STD. NO. WD-15 SHEET 1 OF 1

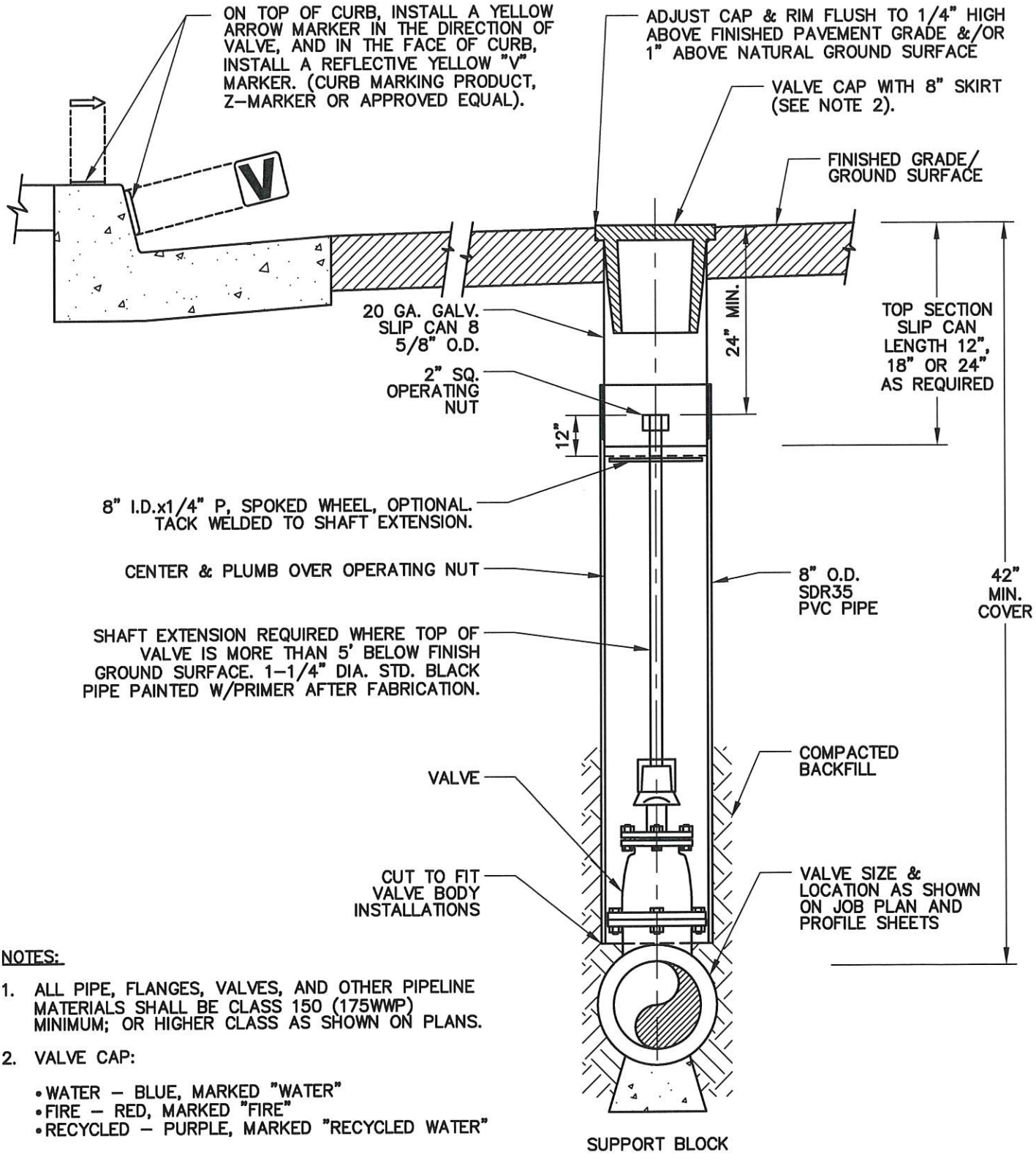

NOTES:

1. ALL PIPE, FLANGES, VALVES, AND OTHER PIPELINE MATERIALS SHALL BE CLASS 150 (175WWP) MINIMUM; OR HIGHER CLASS AS SHOWN ON PLANS.
2. VALVE CAP:
   - WATER – BLUE, MARKED "WATER"
   - FIRE – RED, MARKED "FIRE"
   - RECYCLED – PURPLE, MARKED "RECYCLED WATER"

CITY OF SOUTH GATE INCORPORATED JAN 20, 1923	CITY OF SOUTH GATE DEPARTMENT OF PUBLIC WORKS	**STANDARD VALVE CAN INSTALLATION**	
	APPROVED DIRECTOR OF PUBLIC WORKS — DATE 8/26/21	REVISION	STD. NO. **WD-16** SHEET 1 OF 1

12–INCH AND UNDER

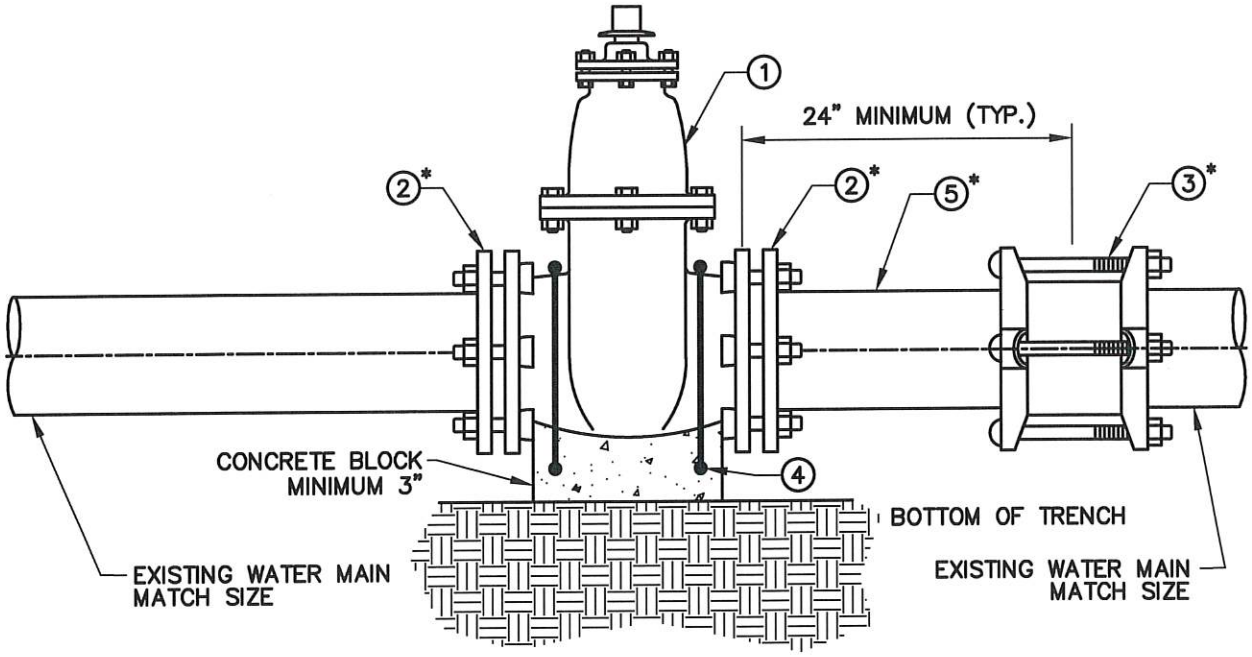

* OPTIONAL BASED ON THE SITE CONDITIONS

ITEM	DESCRIPTION
1	FLG x FLG RESILIENT WEDGE GATE VALVE, NON–RISING STEM
2	FLG x M.J. RESTRAINT JOINT
3	FLEXIBLE COUPLING
4	INSTALL THRUST BLOCK AND VALVE RESTRAINTS PER STD. NO. WD–15
5	D.I.P. FLG x P.E.

CITY OF SOUTH GATE
INCORPORATED JAN 20, 1923

CITY OF SOUTH GATE
DEPARTMENT OF PUBLIC WORKS

CUT-IN VALVE

APPROVED

DIRECTOR OF PUBLIC WORKS

8/26/21
DATE

REVISION

STD. NO.
WD-17

SHEET 1 OF 3

18–INCH AND 20–INCH

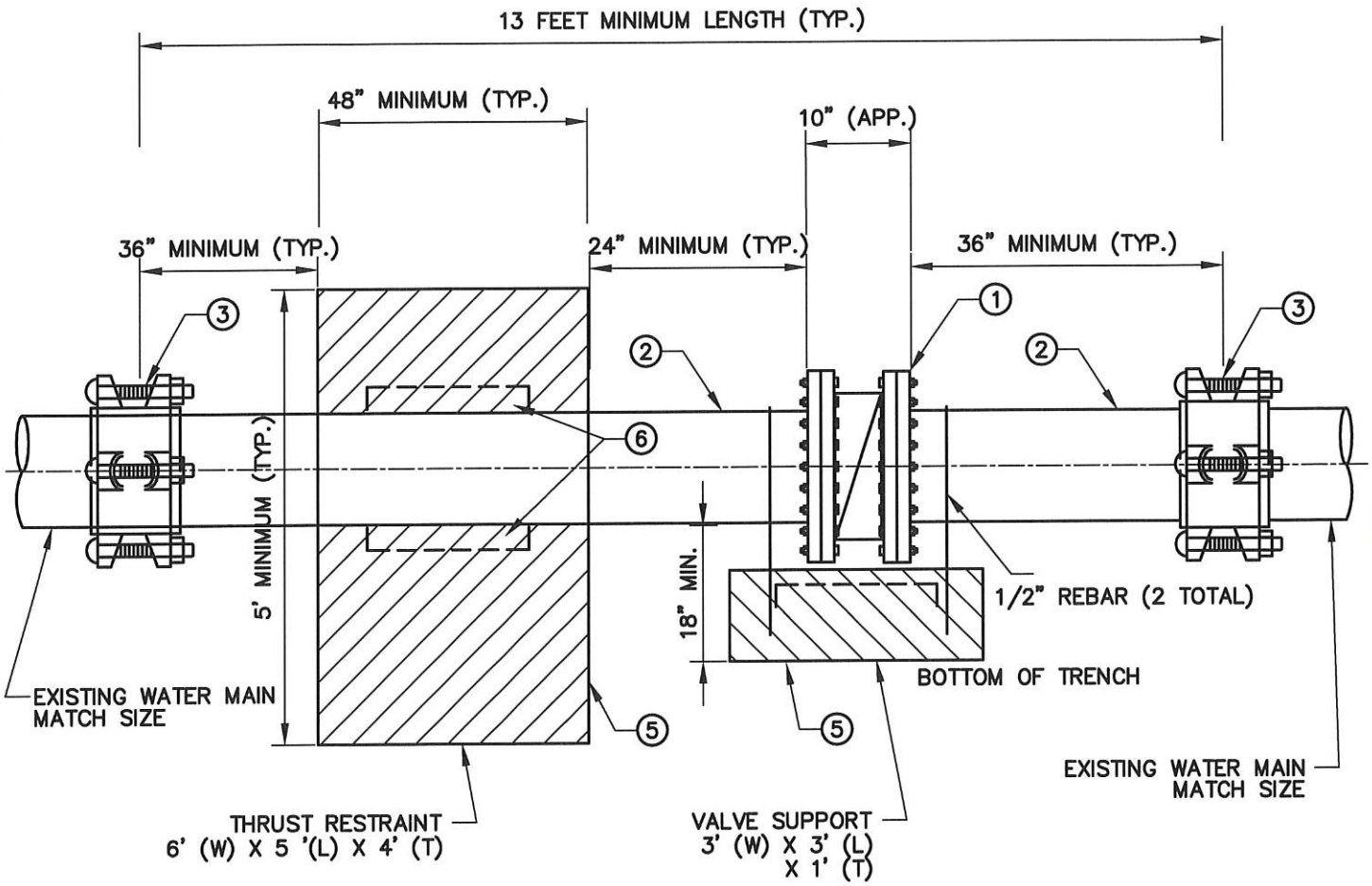

ITEM	DESCRIPTION
1	FLG X FLG BUTTERFLY VALVE
2	FLG X PL CMLCSP/DUCTILE IRON SPOOL
3	FLEXIBLE COUPLING
4	INSTALL THRUST BLOCK AND VALVE RESTRAINTS
5	#4 REBAR MIN 2 FT. ALL AROUND W/2 ½" SUPPORT REBARS
6	6" X 2 FEET WELDED PLATES OR CONCRETE ANCHORS (FOUR TOTAL)

CITY OF SOUTH GATE
INCORPORATED JAN 20, 1923

CITY OF SOUTH GATE
DEPARTMENT OF PUBLIC WORKS

CUT-IN VALVE

APPROVED

DIRECTOR OF PUBLIC WORKS

8/21/26
DATE

REVISION

STD. NO.
WD-17

SHEET 2 OF 3

18–INCH AND 20–INCH

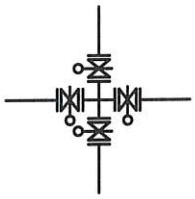

VALVE OPERATOR NUTS TO BE PLACED SOUTH & WEST OF VALVE.

INTERSECTION INSTALLATION
PLAN VIEW

VALVE OPERATOR NUTS TO BE PLACED TOWARD CURB.

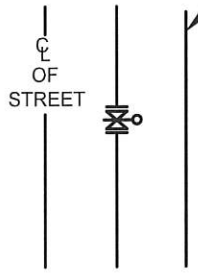

LINE INSTALLATION

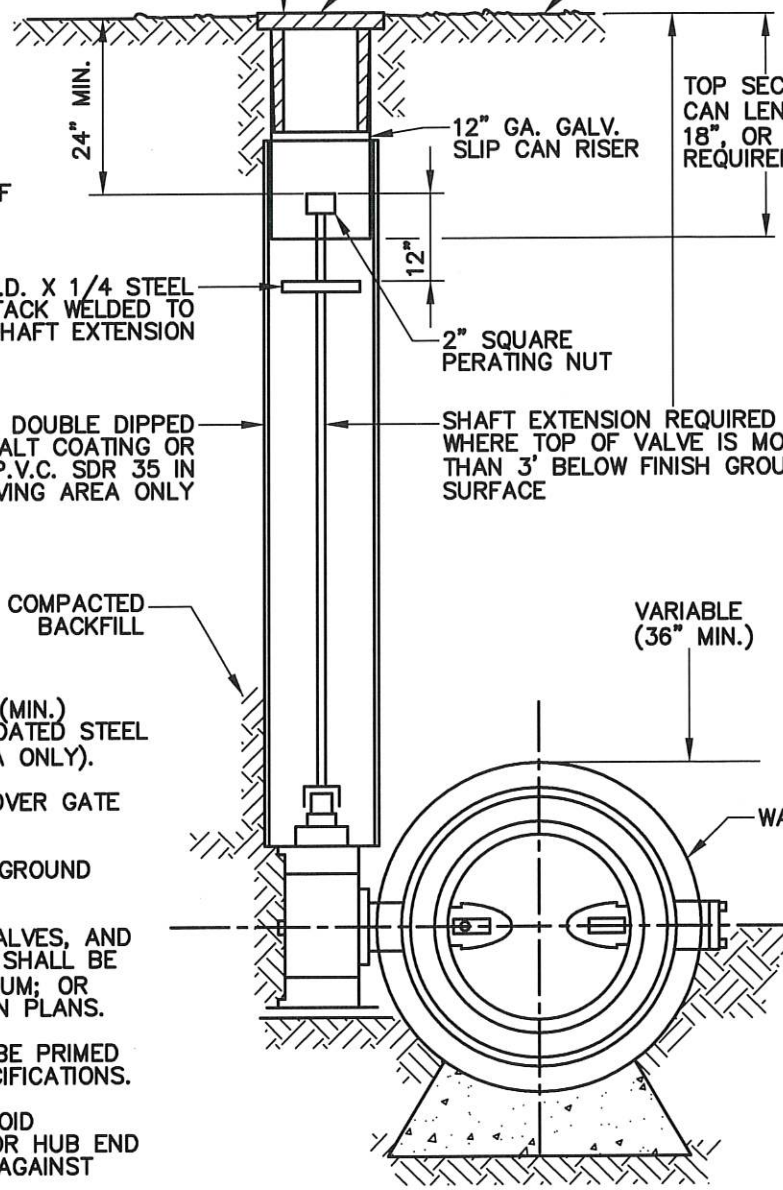

NOTES:

1. VALVE RISER TO BE 12 GA. (MIN.) DOUBLE–DIPPED ASPHALT COATED STEEL PIPE. (P.V.C. IN PAVED AREA ONLY).
2. CENTER AND PLUMB RISER OVER GATE VALVE OPERATION NUT.
3. VALVE CAP TO BE PAINTED GROUND TRAFFIC BLUE.
4. ALL PIPE, FLANGES, GATE VALVES, AND OTHER PIPELINE MATERIALS, SHALL BE CLASS 150 (175 WWP) MINIMUM; OR HIGHER CLASS AS SHOWN ON PLANS.
5. ALL STEEL FLANGES SHALL BE PRIMED AND COATED PER STD. SPECIFICATIONS.
6. CONCRETE SUPPORTS TO AVOID INTERFERENCE WITH BOLTS OR HUB END CONNECTIONS AND POURED AGAINST UNDISTURBED EARTH.

CITY OF SOUTH GATE INCORPORATED JAN 20, 1923	CITY OF SOUTH GATE DEPARTMENT OF PUBLIC WORKS	CUT-IN VALVE	
	APPROVED DIRECTOR OF PUBLIC WORKS	8/26/21 DATE	REVISION
			STD. NO. WD-17 SHEET 3 OF 3

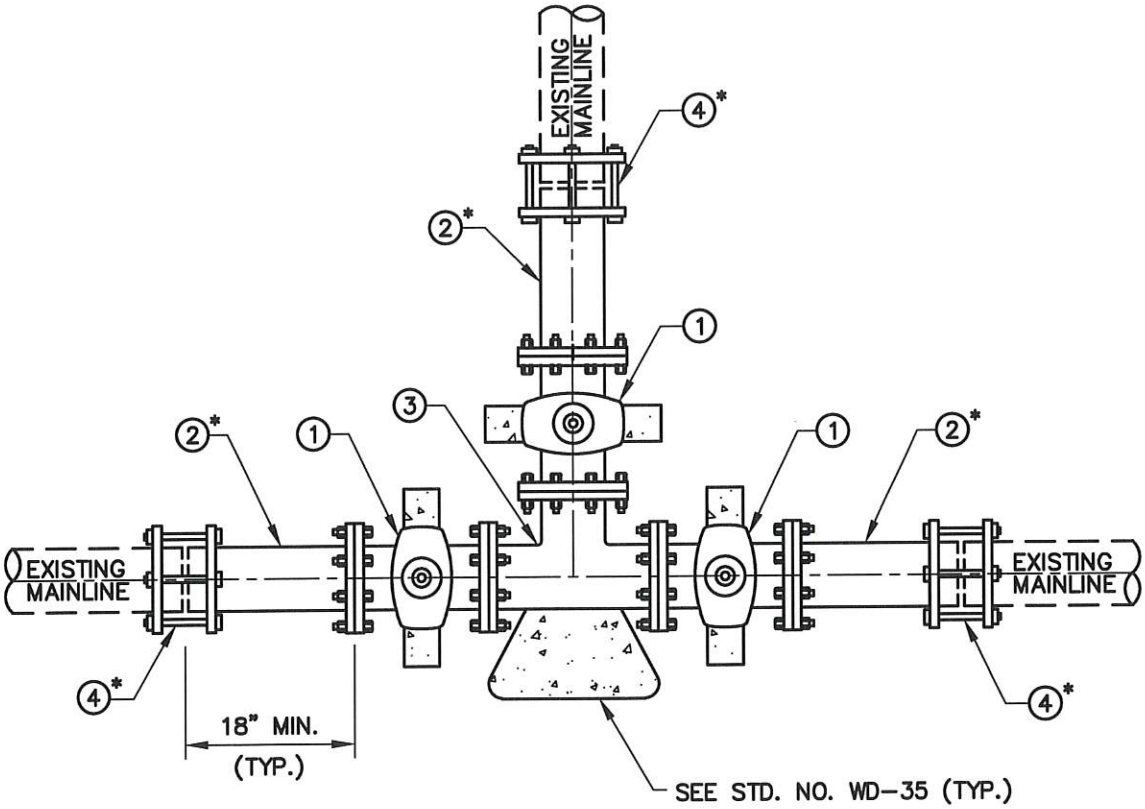

* OPTIONAL BASED ON THE SITE CONDITIONS

NOTES:

1. ALL PIPE MATERIALS SHALL BE DUCTILE IRON.
2. INSTALL THRUST BLOCKS AND RESTRAINTS PER STD. NO. WD-35.
3. WRAP ALL FITTINGS IN 8 MIL PIPEWRAP PLASTIC.

ITEM	DESCRIPTION
1	FLG x FLG (OR FLG x M.J.) RESILIENT WEDGE GATE VALVE, NON-RISING STEM
2	D.I.P. FLG x P.E.
3	FLG x FLG TEE
4	FLEXIBLE COUPLING PER POTABLE WATER MATERIAL GUIDELINES. FOR SAME SIZE O.D., USE DUCTILE IRON M.J. SLEEVE OR FLG x M.J. ADAPTER.

CITY OF SOUTH GATE
INCORPORATED JAN 20, 1923

CITY OF SOUTH GATE
DEPARTMENT OF PUBLIC WORKS

CUT-IN TEE

APPROVED

DIRECTOR OF PUBLIC WORKS

8/26/21
DATE

REVISION

STD. NO.
WD-18

SHEET 1 OF 1

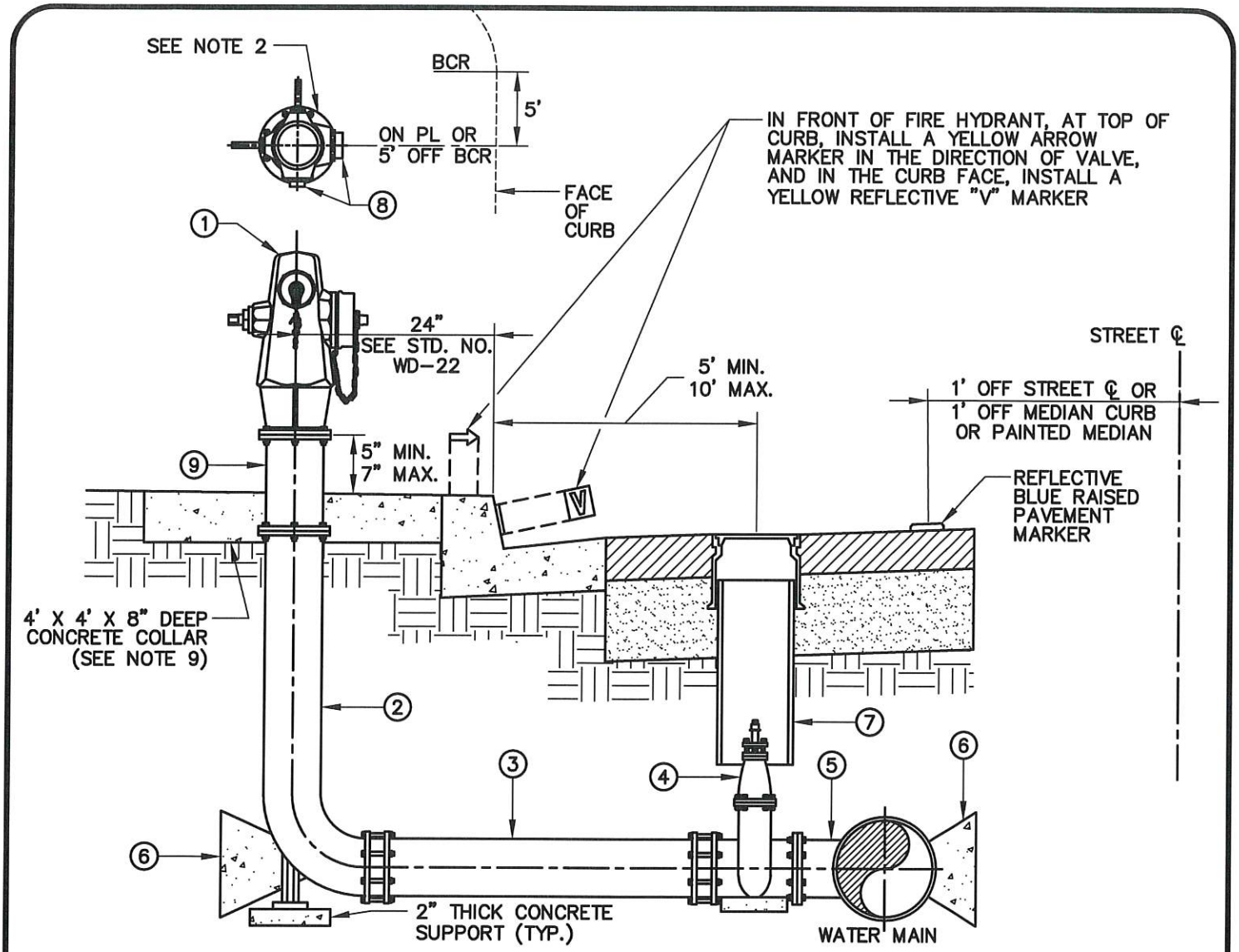

ITEM	DESCRIPTION
1	WET BARREL FIRE HYDRANT, (1) 2-1/2" AND (1) 4" OUTLETS: 1-1/2" PENTAGON OPERATING NUT; 6 BOLT PATTERN
2	FIRE HYDRANT BURY ELL, IN 24", 36", 42", & 48" LENGTHS AS NEEDED; 6 BOLT PATTERN (MJ X FLG)
3	6" AWWA D.I. PIPE CLASS 52
4	6" RESILIENT WEDGE GATE VALVE, MJ X FLG NON-RISING STEM
5	TEE OR TAPPING SLEEVE, TAPPING TO BE PER STD. NOS. WD-13 AND WD-14
6	THRUST BLOCK PER STD. NO. WD-35
7	GATE VALVE CAN ASSEMBLY PER STD. NO. WD-16
8	(1) 4" AND (1) 2-1/2" METAL PROTECTOR CAPS AND CHAIN
9	6" X 12", 18", & 24" CI BREAK-AWAY SPOOL, 3-1/2" LONG BREAK-AWAY BOLTS ON TOP FLANGE AND SOLID BOLTS ON BOTTOM FLANGE. INSTALL NUT ON TOP ON ALL FLANGED JOINTS

CITY OF SOUTH GATE
INCORPORATED JAN 20, 1923

CITY OF SOUTH GATE
DEPARTMENT OF PUBLIC WORKS

RESIDENTIAL FIRE HYDRANT INSTALLATION

APPROVED

DIRECTOR OF PUBLIC WORKS

8/26/21
DATE

REVISION

STD. NO.
WD-19

SHEET 1 OF 2

NOTES:

1. PROVIDE 24" X 36" EXPANSION JOINT AROUND FIRE HYDRANT FOR NEW SIDEWALK CONSTRUCTION.
2. FIRE HYDRANT SHALL BE LOCATED A MINIMUM OF 5' FROM BCR, ECR, OR DRIVEWAY APPROACH.
3. 4-INCH OUTLET TO BE FACING STREET, PERPENDICULAR TO CURB.
4. DISTANCE TO BE 5'-3" WHEN 4-FOOT SIDEWALK IS ADJACENT TO CURB. FOR MORE DETAIL, REFER TO STD. NO. WD-22.
5. FOR ALL CASES, THE LOCATION OF FIRE HYDRANT SHALL MEET ADA REQUIREMENT THAT A MINIMUM 48-INCH CLEARANCE SHALL BE MAINTAINED FROM ANY OBSTRUCTION IN THE WALKWAY.
6. FIRE HYDRANT PAINT COLOR SHALL BE APPROVED BY THE ENGINEER.
7. CONTRACTOR SHALL USE ADDITIONAL RESTRAINED BEND(S) NECESSARY TO AVOID OTHER EXISTING OR PROPOSED UTILITIES WHEN REQUIRED.
8. FOR ROLLED CURBS, THE DISTANCE FROM THE EDGE OF PAVEMENT TO THE FIRE HYDRANT SHALL BE AS DIRECTED BY THE WATER DIVISION.
9. CONCRETE COLLAR TO BE USED ON FIRE HYDRANTS WHERE THERE IS NO CONCRETE SIDEWALK. IF GATE VALVE IS WITHIN 4', THEN EXTEND COLLAR TO A MAXIMUM OF 4' TO INCLUDE THE GATE VALVE AND INSTALL VALVE CAN PER STD. NO. WD-16.

CITY OF SOUTH GATE INCORPORATED JAN 20, 1923	CITY OF SOUTH GATE DEPARTMENT OF PUBLIC WORKS	RESIDENTIAL FIRE HYDRANT INSTALLATION		
	APPROVED DIRECTOR OF PUBLIC WORKS	8/26/21 DATE	REVISION	STD. NO. WD-19 SHEET 2 OF 2

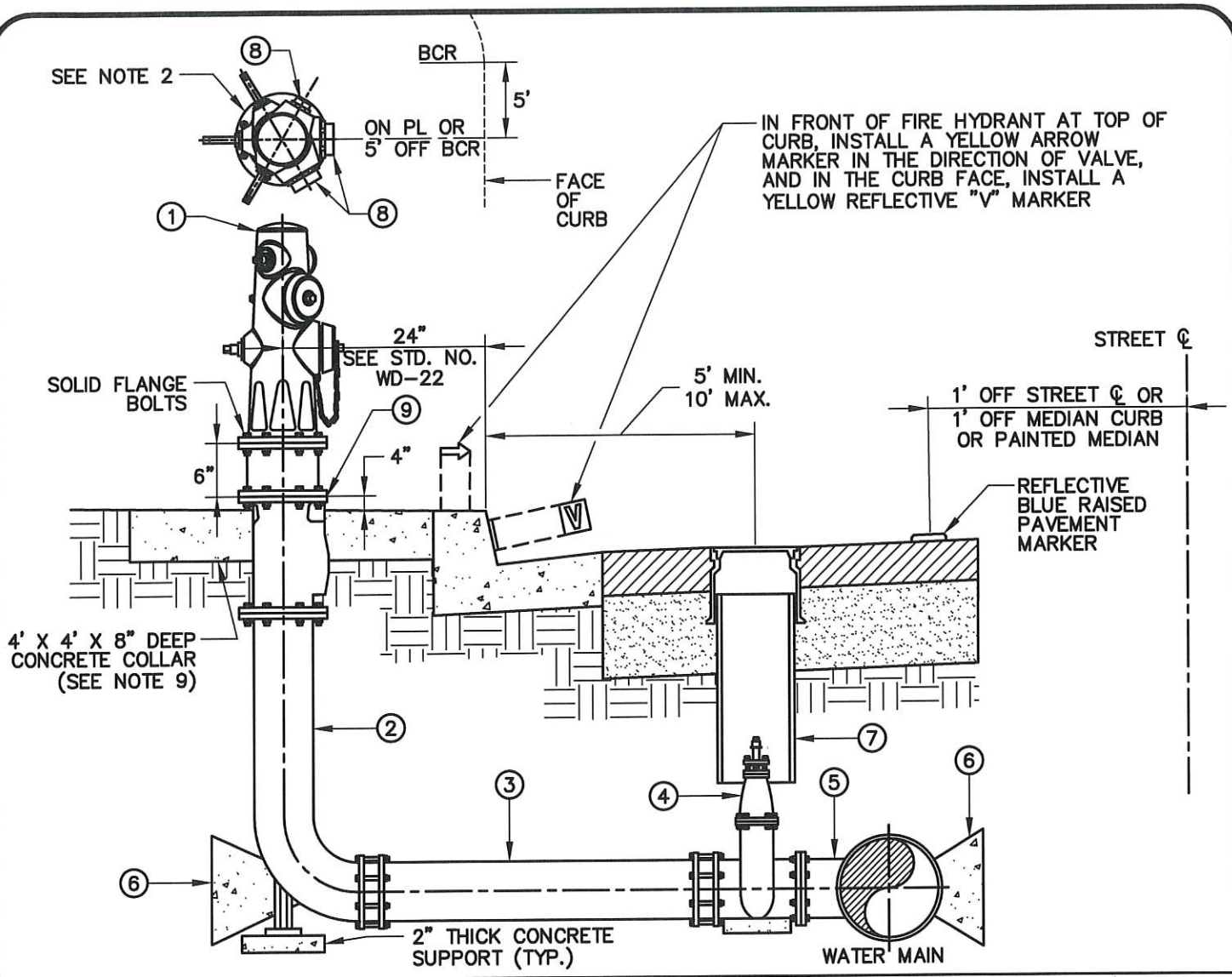

ITEM	DESCRIPTION
1	WET BARREL FIRE HYDRANT, (2) 2-1/2" AND (1) 4" OUTLETS: 1-1/2" PENTAGON OPERATING NUT; 6 BOLT PATTERN
2	FIRE HYDRANT BURY ELL, IN 24", 36", 42", & 48" LENGTHS AS NEEDED; 6 BOLT PATTERN (MJ X FLG)
3	6" AWWA D.I. PIPE CLASS 52
4	6" RESILIENT WEDGE GATE VALVE, MJ X FLG, NON-RISING STEM
5	TEE OR TAPPING SLEEVE, TAPPING TO BE PER STD. NOS. WD-13 AND WD-14
6	THRUST BLOCK PER STD. NO. WD-35
7	GATE VALVE CAN ASSEMBLY PER STD. NO. WD-16
8	(1) 4" AND (2) 2-1/2" METAL PROTECTOR CAPS AND CHAIN
9	6" DIA. C.I. BREAK-AWAY CHECK VALVE, 3-1/2" LONG SOLID BOLTS INSTALLED WITH NUT ON TOP ON ALL FLANGED JOINTS

CITY OF SOUTH GATE
INCORPORATED JAN 20, 1923

CITY OF SOUTH GATE
DEPARTMENT OF PUBLIC WORKS

COMMERCIAL/ INDUSTRIAL/INSTITUTIONAL FIRE HYDRANT INSTALLATION

APPROVED
DIRECTOR OF PUBLIC WORKS

8/26/21
DATE

REVISION

STD. NO.
WD-20

SHEET 1 OF 2

NOTES:

1. PROVIDE 24" X 36" EXPANSION JOINT AROUND FIRE HYDRANT FOR NEW SIDEWALK CONSTRUCTION.
2. FIRE HYDRANT SHALL BE LOCATED A MINIMUM OF 5' FROM BCR, ECR, OR DRIVEWAY APPROACH.
3. 4-INCH OUTLET TO BE FACING STREET, PERPENDICULAR TO CURB.
4. DISTANCE TO BE 5'-3" WHEN 4-FOOT SIDEWALK IS ADJACENT TO CURB. FOR MORE DETAIL, REFER TO STD. NO. WD-22.
5. FOR ALL CASES, THE LOCATION OF FIRE HYDRANT SHALL MEET ADA REQUIREMENT THAT A MINIMUM 48-INCH CLEARANCE SHALL BE MAINTAINED FROM ANY OBSTRUCTION IN THE WALKWAY.
6. FIRE HYDRANT PAINT COLOR SHALL BE APPROVED BY THE ENGINEER.
7. CONTRACTOR SHALL USE ADDITIONAL RESTRAINED BEND(S) NECESSARY TO AVOID OTHER EXISTING OR PROPOSED UTILITIES WHEN REQUIRED.
8. FOR ROLLED CURBS, THE DISTANCE FROM THE EDGE OF PAVEMENT TO THE FIRE HYDRANT SHALL BE AS DIRECTED BY THE WATER DIVISION.
9. CONCRETE COLLAR TO BE USED ON FIRE HYDRANTS WHERE THERE IS NO CONCRETE SIDEWALK. IF GATE VALVE IS WITHIN 4', THEN EXTEND COLLAR TO A MAXIMUM OF 4' TO INCLUDE THE GATE VALVE AND INSTALL VALVE CAN PER STD. NO. WD-16.

CITY OF SOUTH GATE INCORPORATED JAN 20, 1923	CITY OF SOUTH GATE DEPARTMENT OF PUBLIC WORKS	COMMERCIAL/ INDUSTRIAL/INSTITUTIONAL FIRE HYDRANT INSTALLATION	
	APPROVED DIRECTOR OF PUBLIC WORKS — DATE 8/26/21	REVISION	STD. NO. **WD-20** SHEET 2 OF 2

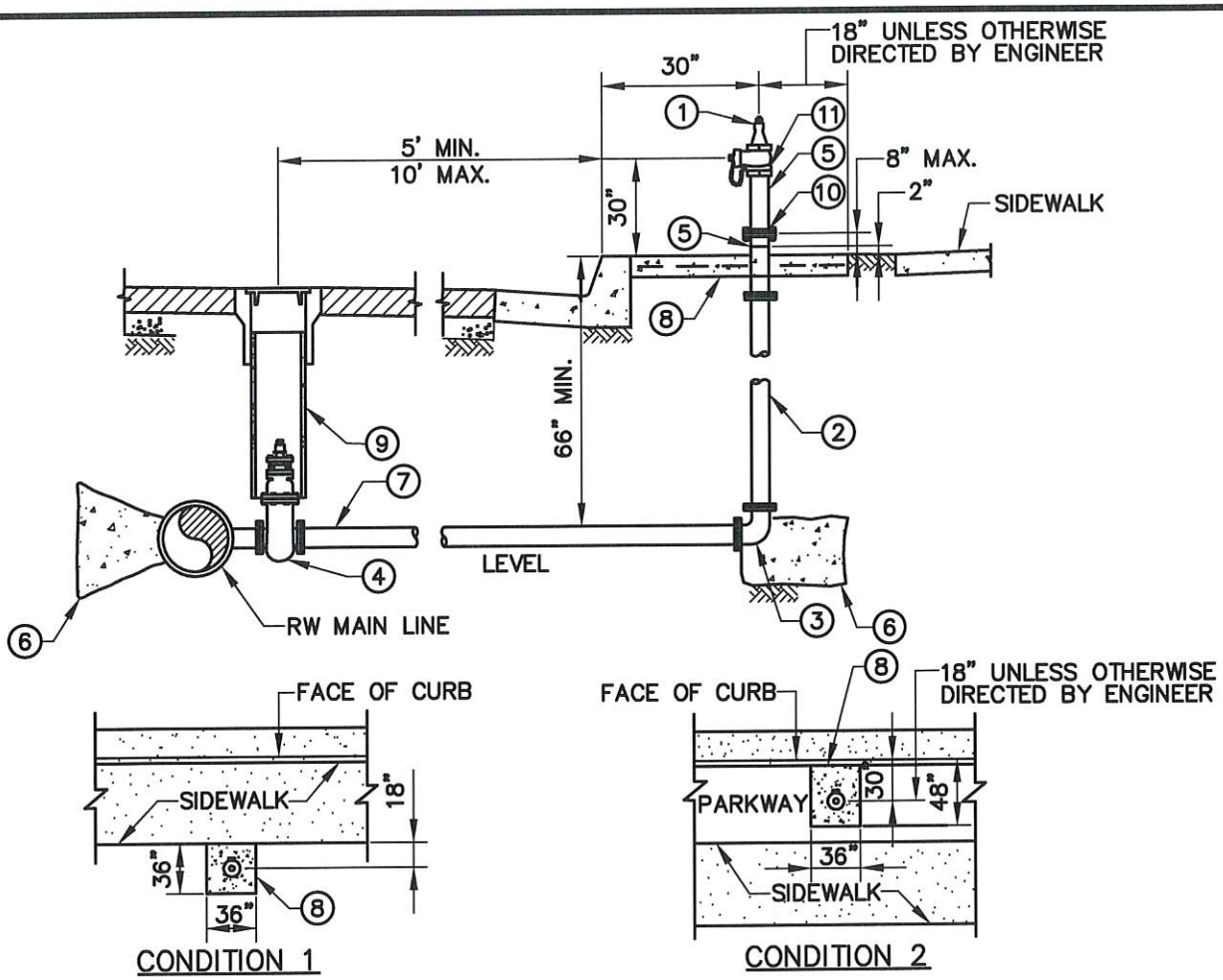

HYDRANT LOCATION PLANS

ITEM	DESCRIPTION
1	3" F.I.P. X 2-1/2" NST FIRE HOSE OUTLET RECYCLED WATER WHARF HEAD STYLE HYDRANT WITH 2-1/2" HOSE OUTLET, PAINTED PURPLE
2	4" D.I.P. SPOOL, FLG X FLG
3	4" D.I.P., 90 DEGREE BEND, FLG X M.J. OR FLG X FLG
4	4" FLG X M.J. VALVE
5	4" D.I.P. SPOOL, PAINTED PURPLE
6	THRUST BLOCK PER STD. NO. WD-35
7	4" D.I.P. WHERE REQUIRED
8	CONSTRUCT 48" X 36" X 6" THICK OR 36" X 36" X 6" THICK CONCRETE PAD REINFORCED WITH W.W.F. 1.6 X 1.6, SEE HYDRANT LOCATION PLANS ON THIS SHEET FOR APPLICABLE CONDITION
9	VALVE BOX PER STD. NO. WD-16. VALVE COVER PAINTED PURPLE, WITH "RECLAIMED WATER" CASTING
10	4" DUCTILE IRON COMPANION FLANGES, THREADED, WITH BREAK-AWAY BOLTS
11	4" FLG X 3" F.I.P. DUCTILE IRON COMPANION FLANGE AND 3" CLOSE NIPPLE PIPE

CITY OF SOUTH GATE
INCORPORATED JAN 20, 1923

CITY OF SOUTH GATE
DEPARTMENT OF PUBLIC WORKS

RECYCLED WATER WHARF HEAD HYDRANT

APPROVED

DIRECTOR OF PUBLIC WORKS

8/26/21
DATE

REVISION

STD. NO.
WD-21

SHEET 1 OF 2

NOTES:

1. RECYCLED WATER WHARF HEAD TYPE HYDRANTS FOR PERMANENT USE SHALL BE CONSTRUCTED ON THE MAIN LINE ONLY IN SELECT LOCATIONS AS APPROVED BY THE ENGINEER.
2. RECYCLED WATER WHARF HEAD TYPE HYDRANTS SHALL BE PAINTED PURPLE.
3. LOCATE 2-1/2" HOSE OUTLET PERPENDICULAR TO THE CURB LINE.
4. AT NO POINT SHALL ANY PART OF THE HYDRANT BE CLOSER THAN 36" AWAY FROM ANY STRUCTURE, LANDSCAPING, OR PATH OF TRAVEL.
5. FILL BREAK-AWAY BOLTS WITH SILICONE SEALANT.

CITY OF SOUTH GATE INCORPORATED JAN 20, 1923	CITY OF SOUTH GATE DEPARTMENT OF PUBLIC WORKS	RECYCLED WATER WHARF HEAD HYDRANT		
	APPROVED DIRECTOR OF PUBLIC WORKS	8/26/2 DATE	REVISION	STD. NO. WD-21 SHEET 2 OF 2

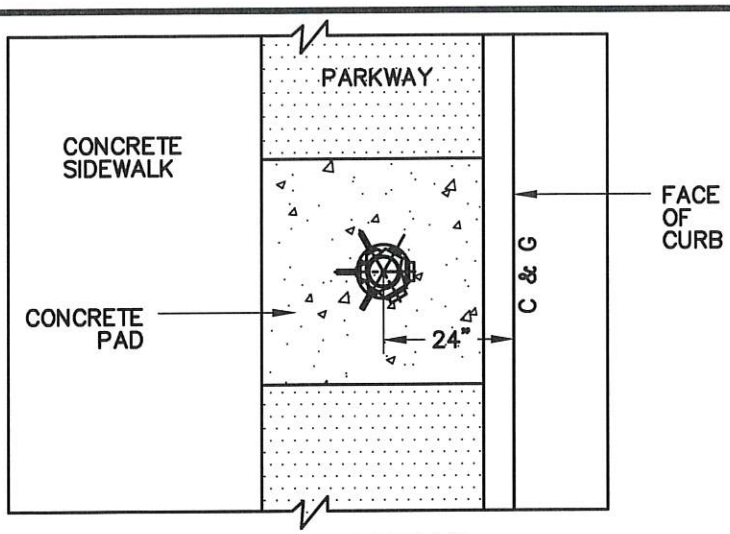

DETACHED SIDEWALK

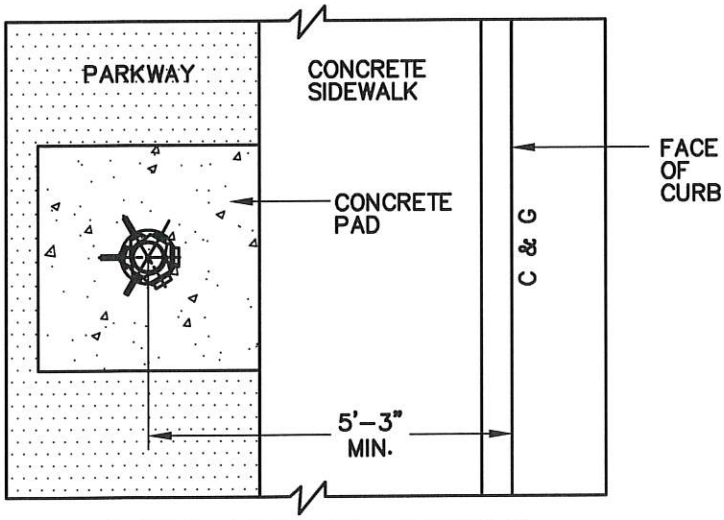

4' WIDE ATTACHED SIDEWALK

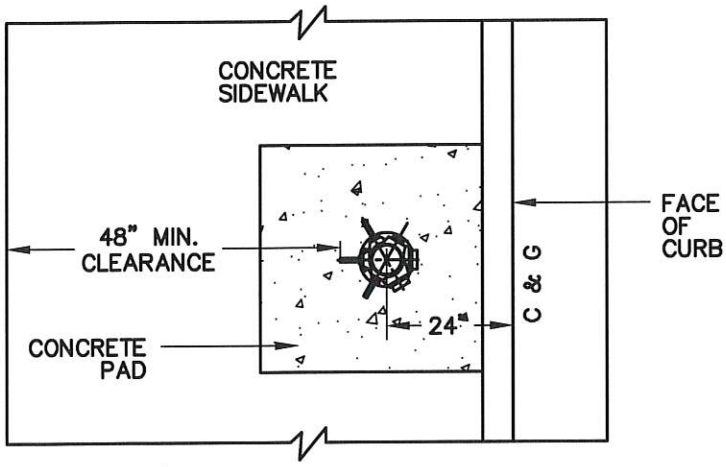

6' OR WIDER SIDEWALK

NOTE:

FOR ALL CASES, THE LOCATION OF FIRE HYDRANT SHALL MEET ADA REQUIREMENTS THAT A MINIMUM 48-INCH CLEARANCE SHALL BE MAINTAINED FROM ANY OBSTRUCTION IN THE WALKWAY.

CITY OF SOUTH GATE INCORPORATED JAN 20, 1923	CITY OF SOUTH GATE DEPARTMENT OF PUBLIC WORKS	**FIRE HYDRANT SETBACK DETAIL**	
	APPROVED DIRECTOR OF PUBLIC WORKS	8/26/21 DATE	REVISION
			STD. NO. **WD-22** SHEET 1 OF 1

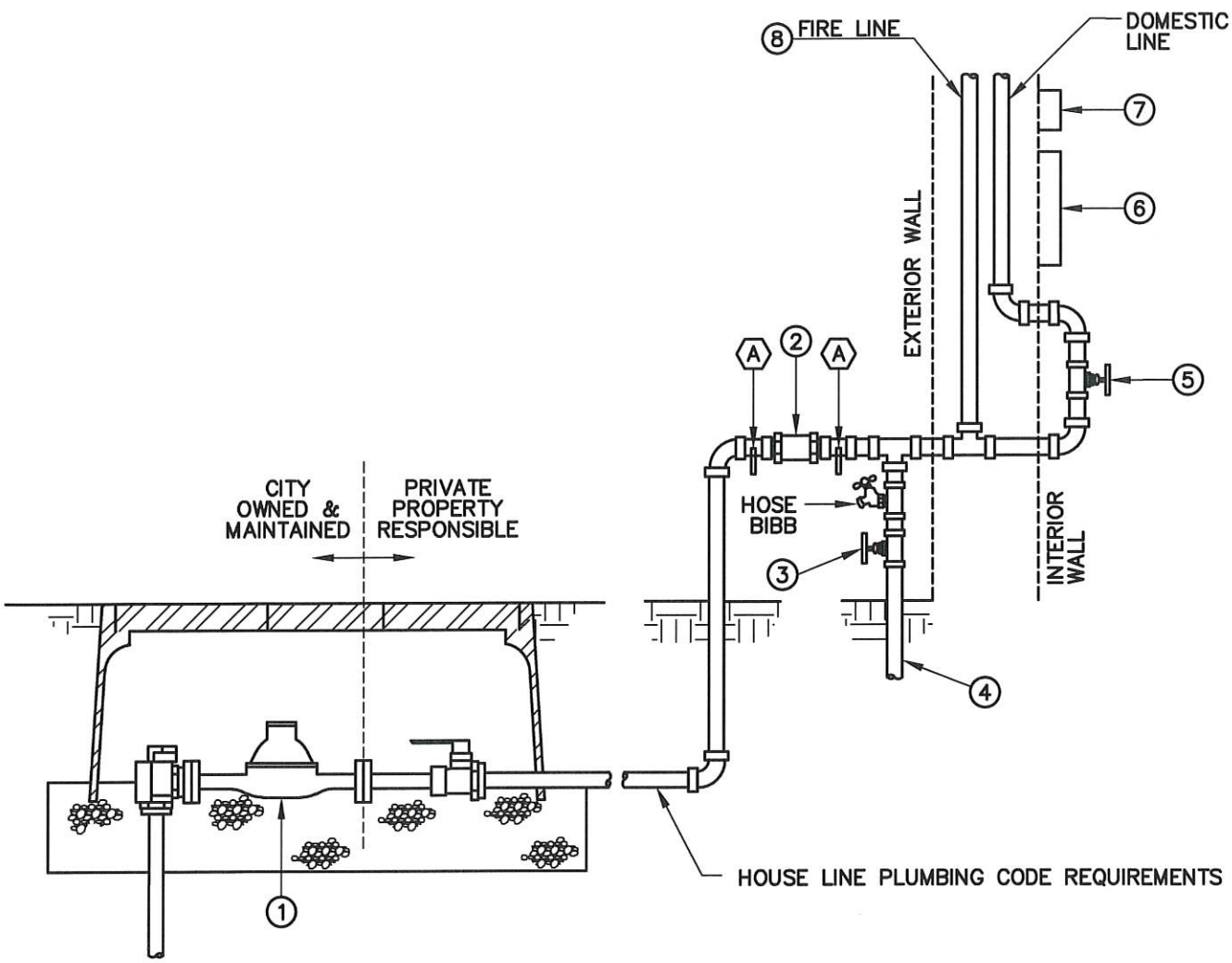

NO.	SIZE AND DESCRIPTION
1	RESIDENTIAL FIRE METER: MINIMUM 1" FOR RESIDENTIAL FIRE SERVICE
2	DOUBLE CHECK VALVE BACK FLOW ASSEMBLY, U.S.C. APPROVED
3	IRRIGATION SHUT OFF VALVE
4	IRRIGATION LINE
5	PRIVATE PROPERTY SHUTOFF
6	ACCESS PANEL WITH FIRE DEPT. SIGNAGE
7	FIRE SPRINKLER SPARE HEAD BOX
8	APPROVED FIRE SPRINKLER SYSTEM

NOTES:

1. FOR WATER SERVICE AND METER DETAILS, SEE STANDARD PLANS.

A REMOVE AND STORE BACK FLOW ASSEMBLY SHUT OFF VALVE HANDLES IN FIRE SPRINKLER SPARE HEAD BOX.

CITY OF SOUTH GATE
INCORPORATED JAN 20, 1923

CITY OF SOUTH GATE
DEPARTMENT OF PUBLIC WORKS

FIRE AND DOMESTIC COMBINATION METER AND BACKFLOW ASSEMBLY

APPROVED

DIRECTOR OF PUBLIC WORKS

8/26/21
DATE

REVISION

STD. NO.
WD-23

SHEET 1 OF 1

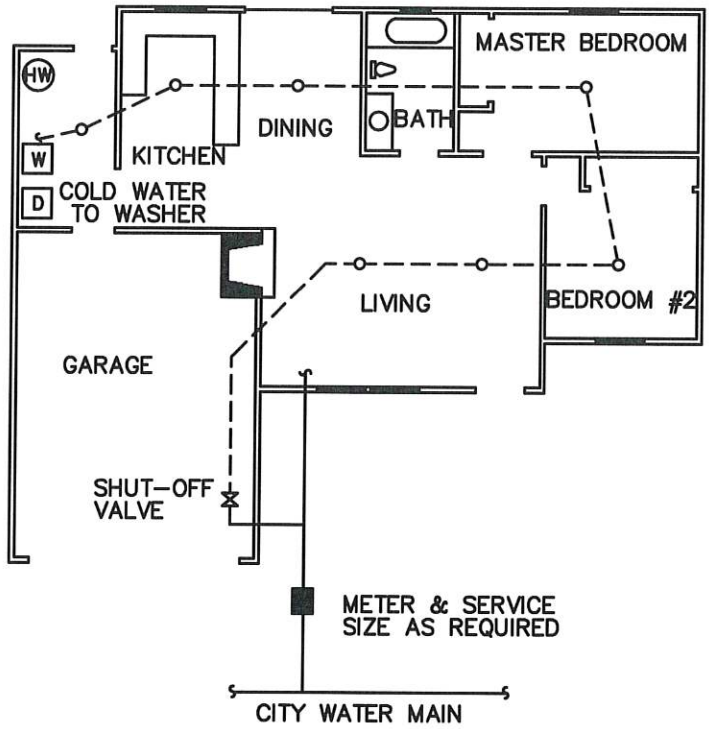

METHOD – 1

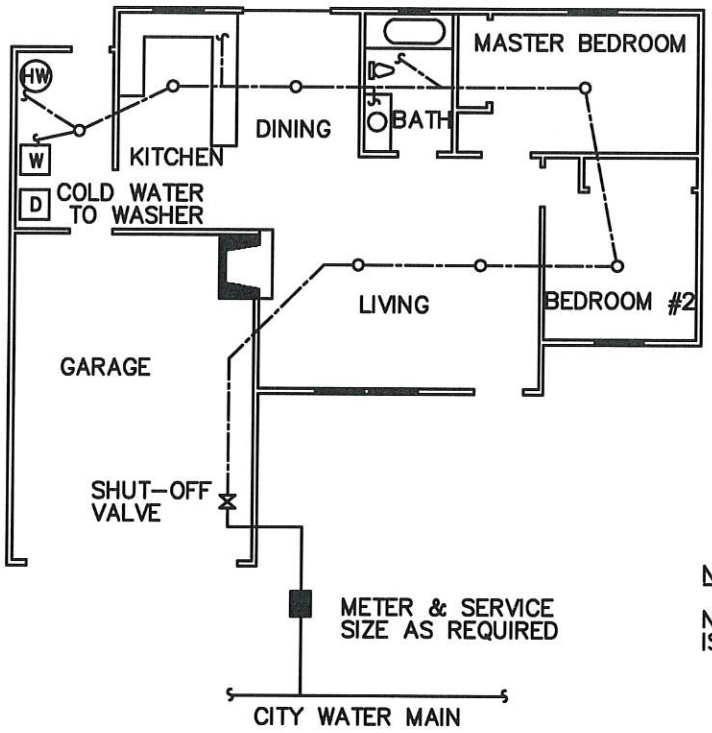

METHOD – 2

NOTES:

NFPA 13D COMPLIANCE IS REQUIRED.

CITY OF SOUTH GATE DEPARTMENT OF PUBLIC WORKS	**METER PROTECTION FOR RESIDENTIAL FIRE SPRINKLER SYSTEM**		
APPROVED DIRECTOR OF PUBLIC WORKS	8/26/21 DATE	REVISION	STD. NO. **WD-24** SHEET 1 OF 1

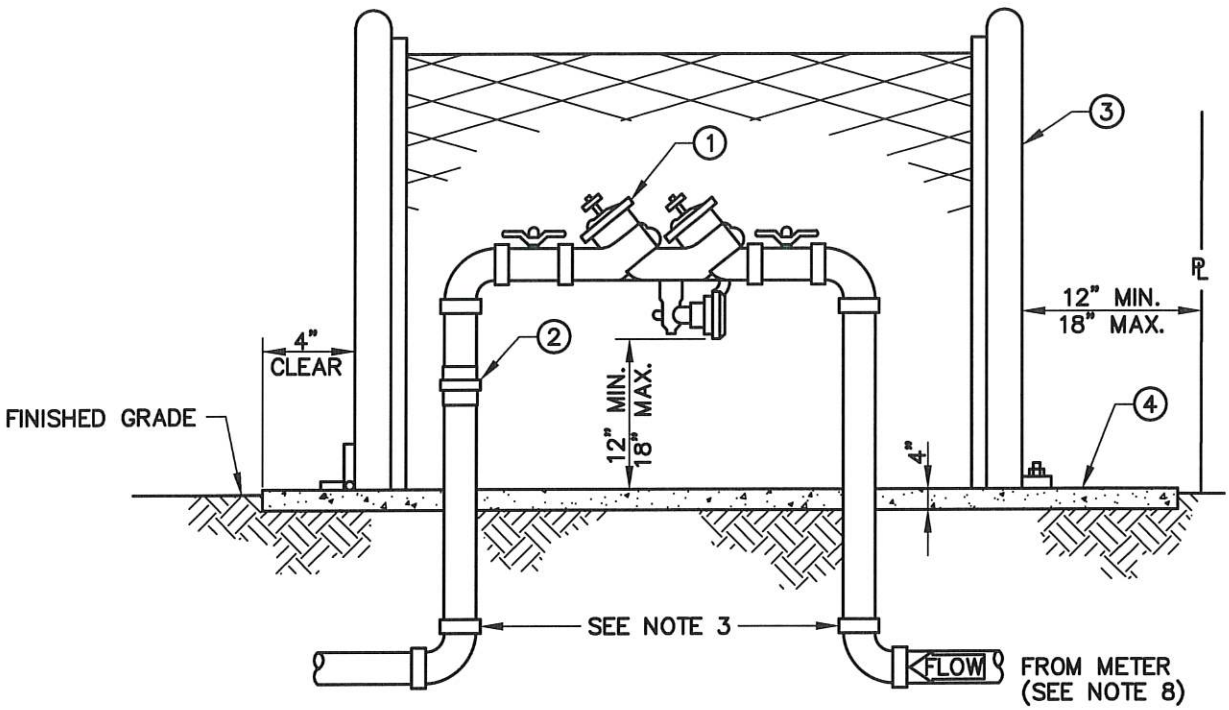

LIST OF MATERIALS

ITEM	DESCRIPTION
1	APPROVED REDUCED PRESSURE BACKFLOW PREVENTION ASSEMBLY.
2	BRASS UNION REQUIRED IF THREADED FITTINGS (ELBOWS) ARE USED.
3	BACKFLOW PREVENTION ASSEMBLY ENCLOSURE PER MANUFACTURER'S RECOMMENDATIONS (SEE NOTES 1 AND 2). MUST BE HINGED, LOCKABLE, ROUNDED TUBULAR SHAPE.
4	CONCRETE PAD, CLASS 520-C-2500, MUST BE CONSTRUCTED TO ENSURE 4" CLEARANCE AROUND THE BACKFLOW ENCLOSURE.

NOTES:

1. SEE SPECIFICATIONS FOR APPROVED BACKFLOW ASSEMBLIES, BACKFLOW ENCLOSURES, TESTING REQUIREMENTS, PLACEMENT OF BACKFLOW ASSEMBLIES AND OTHER REQUIREMENTS.
2. PROPOSED LOCATION OF THE BACKFLOW DEVICE, PROTECTIVE ENCLOSURE AND ALL PARTS MUST BE APPROVED BY THE ENGINEER PRIOR TO INSTALLATION.
3. ALL FITTINGS AND PIPE SHALL BE BRASS OR COPPER WITH EITHER IPT OR SOLDERED CONNECTIONS, RESPECTIVELY. NO PVC UNDER ENCLOSURE CONCRETE SLAB – COPPER ONLY. INLET AND OUTLET PIPE SHALL BE COPPER.
4. A WYE STRAINER OR HOSE BIBB IS NOT ALLOWED TO BE INSTALLED ON BACKFLOW ASSEMBLY PIPING.
5. A PRESSURE REDUCER, IF REQUIRED, IS ONLY PERMITTED AT THE BUILDING AND NOT ON THE BACKFLOW ASSEMBLY.
6. THERE SHALL BE NO CONNECTIONS BETWEEN THE METER AND THE BACKFLOW ASSEMBLY.
7. FINAL PLACEMENT OF THE BACKFLOW PREVENTION ENCLOSURE MUST BE AT LEAST 12" BEHIND THE PUBLIC RIGHT-OF-WAY.
8. IF A NEW METER IS INSTALLED, PIPE SHALL BE COPPER FROM METER TO BACKFLOW. IF THERE IS EXISTING PIPING TO THE METER, IT MAY REMAIN PER PLUMBING CODE.

CITY OF SOUTH GATE
INCORPORATED JAN 20, 1923

CITY OF SOUTH GATE
DEPARTMENT OF PUBLIC WORKS

3/4 THROUGH 2-INCH REDUCED PRESSURE BACKFLOW PREVENTION ASSEMBLY

APPROVED

DIRECTOR OF PUBLIC WORKS

8/26/21
DATE

REVISION

STD. NO.
WD-25

SHEET 1 OF 1

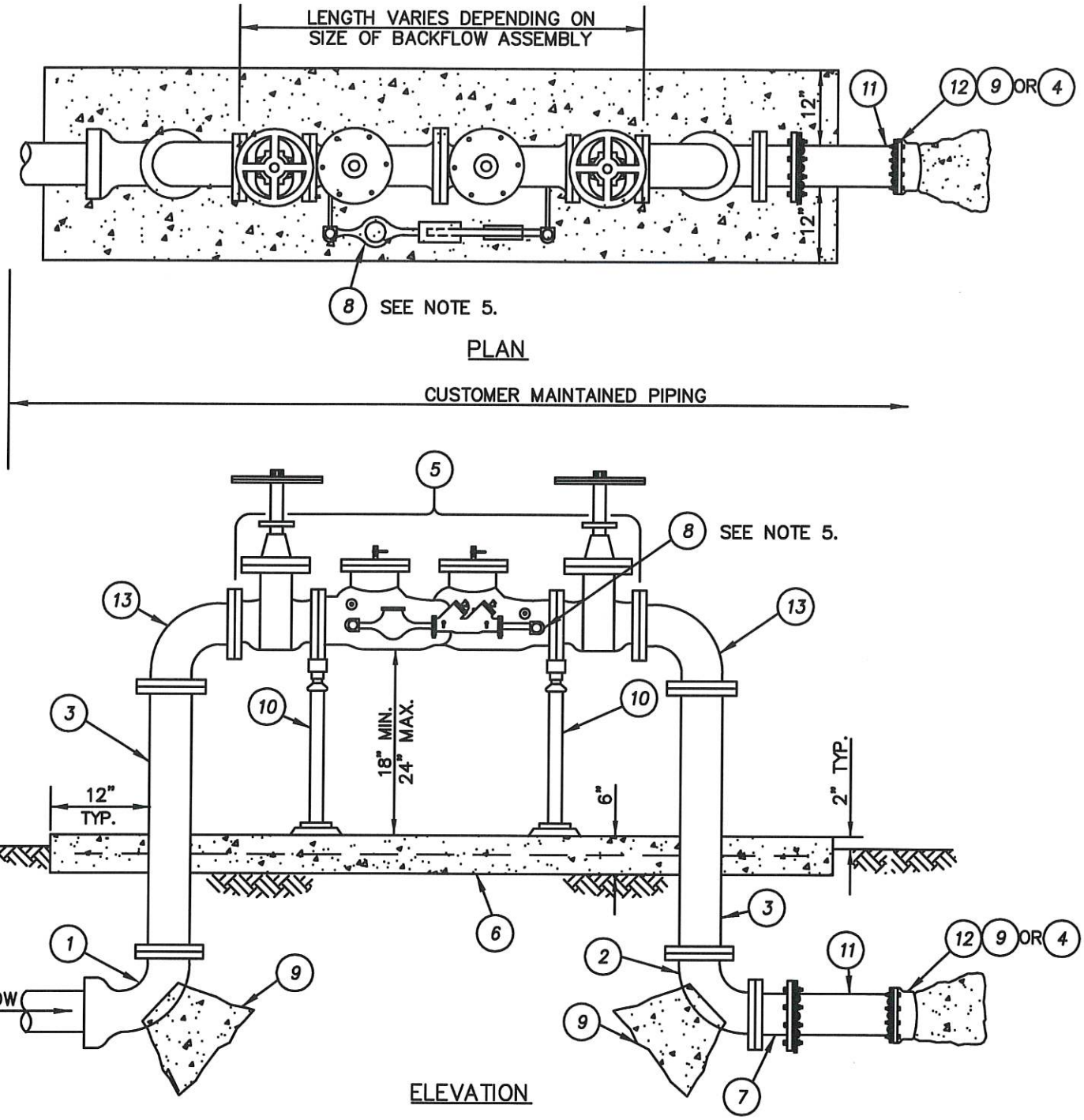

CITY OF SOUTH GATE INCORPORATED JAN 20, 1923	CITY OF SOUTH GATE DEPARTMENT OF PUBLIC WORKS	DOUBLE CHECK BACKFLOW ASSEMBLY	
	APPROVED DIRECTOR OF PUBLIC WORKS	8/26/21 DATE	REVISION
			STD. NO. WD-26 SHEET 1 OF 2

ITEM	DESCRIPTION
1	DUCTILE IRON 90° BEND FLG x MJ
2	DUCTILE IRON 90° BEND FLG x FLG
3	DUCTILE IRON SPOOL FLG x FLG LENGTH AS REQUIRED
4	TRANSITION COUPLING (BY OTHERS, FOR ON-SITE CONNECTION WHEN ON-SITE PIPING EXISTS)
5	APPROVED DOUBLE CHECK VALVE BACKFLOW PREVENTION ASSEMBLY WITH RISING STEM RESILIENT WEDGE GATE VALVES
6	6" THICK P.C.C. SLAB, REINFORCE WITH W.W.F. 1.6 X 1.6
7	FLG X MJ ADAPTER WITH RETAINER GLAND
8	FACTORY INSTALLED BY-PASS METER ASSEMBLY CONSISTING OF APPROVED POSITIVE DISPLACEMENT METER, REDUCED PRESSURE PRINCIPLE DEVICE AND ASSOCIATED PIPING. METER TO BE USED FOR FIRE SYSTEMS ONLY
9	THRUST BLOCK PER STD. NO. W-35
10	PIPE SUPPORT PER STD. NO WD-43
11	DUCTILE IRON PIPE PE X FLG
12	END CAP (IF REQUIRED)
13	DUCTILE IRON 90° BEND FLG X FLG. FOR 3" DOUBLE CHECK BACKFLOW PREVENTION ASSEMBLY USE 4"x3" DUCTILE IRON 90° REDUCING BEND FLG x FLG

NOTES:

1. NOTIFY CITY PRIOR TO INSTALLATION OF BACKFLOW DEVICE.
2. BACKFLOW ASSEMBLY SHALL BE A MINIMUM OF 36" FROM ANY STRUCTURE, CURB OR SIDE WALK.
3. LOCATION OF BACKFLOW ASSEMBLY SHALL BE APPROVED BY THE ENGINEER.
4. PLACE BRASS PLUGS IN ALL TEST VALVE OUTLETS.
5. BY-PASS METER TO BE USED FOR FIRE SYSTEMS ONLY. DO NOT INSTALL BY-PASS METERS WHERE SUPPLY TO DEVICE IS ALREADY METERED.

CITY OF SOUTH GATE
INCORPORATED JAN 20, 1923

CITY OF SOUTH GATE
DEPARTMENT OF PUBLIC WORKS

DOUBLE CHECK BACKFLOW ASSEMBLY

APPROVED

DIRECTOR OF PUBLIC WORKS

DATE

REVISION

STD. NO.
WD-26

SHEET 2 OF 2

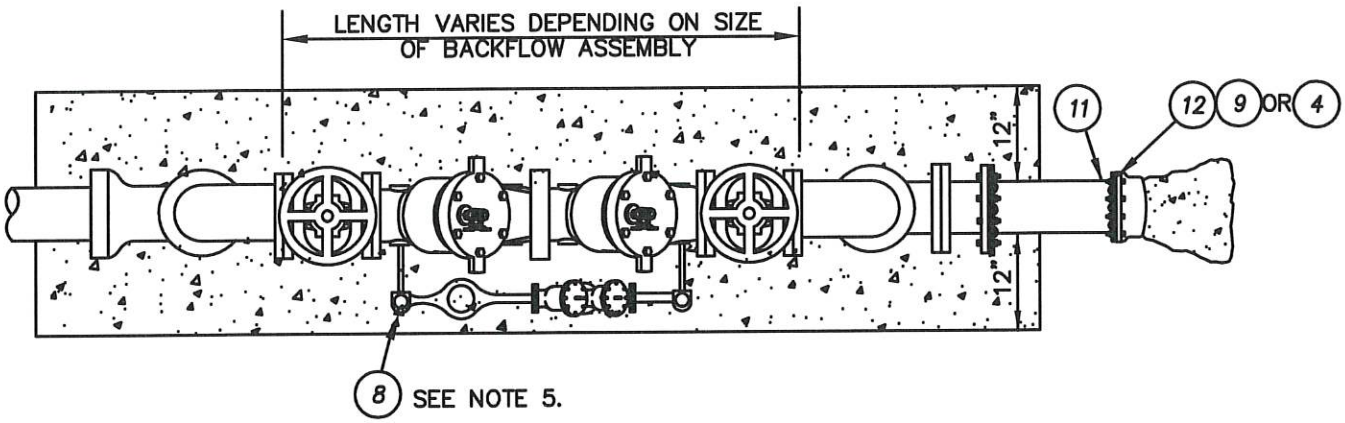

PLAN

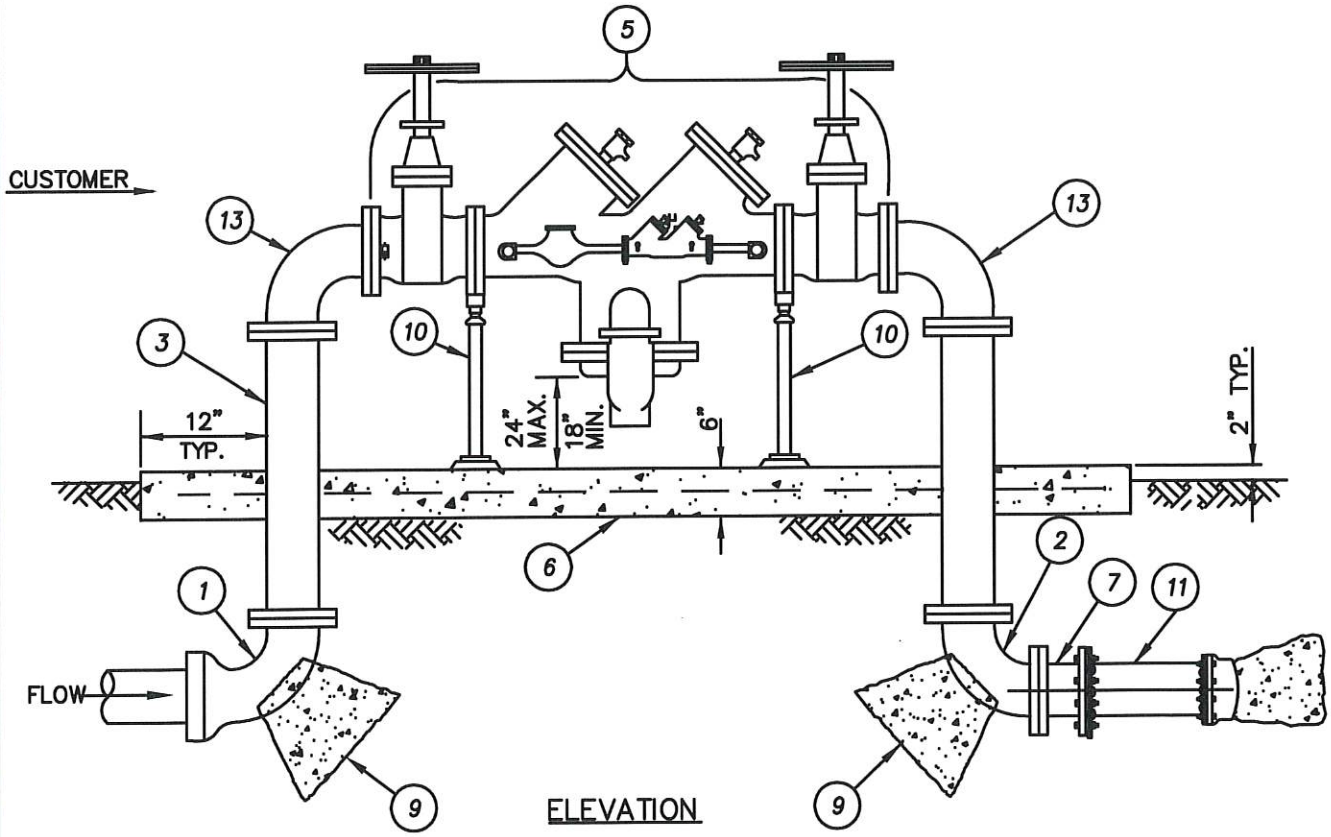

ELEVATION

CITY OF SOUTH GATE DEPARTMENT OF PUBLIC WORKS	REDUCED PRESSURE PRINCIPLE BACKFLOW ASSEMBLY		
APPROVED DIRECTOR OF PUBLIC WORKS	8/26/21 DATE	REVISION	STD. NO. **WD-27** SHEET 1 OF 2

ITEM	DESCRIPTION
1	DUCTILE IRON 90° BEND FLG x MJ
2	DUCTILE IRON 90° BEND FLG x FLG
3	DUCTILE IRON SPOOL FLG x FLG LENGTH AS REQUIRED
4	TRANSITION COUPLING (BY OTHERS, FOR ON-SITE CONNECTION WHEN ON-SITE PIPING EXISTS)
5	APPROVED REDUCED PRESSURE PRINCIPAL BACKFLOW PREVENTION ASSEMBLY WITH RISING STEM RESILIENT WEDGE GATE VALVES
6	6" THICK P.C.C. SLAB, REINFORCE WITH W.W.F. 1.6 X 1.6
7	FLG X MJ ADAPTER WITH RETAINER GLAND
8	FACTORY INSTALLED BY-PASS METER ASSEMBLY CONSISTING OF APPROVED POSITIVE DISPLACEMENT METER, REDUCED PRESSURE PRINCIPLE DEVICE AND ASSOCIATED PIPING. METER TO BE USED FOR FIRE SYSTEMS ONLY
9	THRUST BLOCK PER STD. NO. W-35
10	PIPE SUPPORT PER STD. NO WD-43
11	DUCTILE IRON PIPE PE X FLG
12	END CAP (IF REQUIRED)
13	DUCTILE IRON 90° BEND FLG X FLG. FOR 3" REDUCED PRESSURE PRINCIPLE BACKFLOW ASSEMBLY USE 4"x3" DUCTILE IRON 90° REDUCING BEND FLG x FLG

NOTES:

1. NOTIFY CITY PRIOR TO INSTALLATION OF BACKFLOW DEVICE.
2. BACKFLOW ASSEMBLY SHALL BE A MINIMUM OF 36" FROM ANY STRUCTURE, CURB OR SIDE WALK.
3. LOCATION OF BACKFLOW ASSEMBLY SHALL BE APPROVED BY THE ENGINEER.
4. PLACE BRASS PLUGS IN ALL TEST VALVE OUTLETS.
5. BY-PASS METER TO BE USED FOR FIRE SYSTEMS ONLY. DO NOT INSTALL BY-PASS METERS WHERE SUPPLY TO DEVICE IS ALREADY METERED.

CITY OF SOUTH GATE
INCORPORATED JAN 20, 1923

CITY OF SOUTH GATE
DEPARTMENT OF PUBLIC WORKS

REDUCED PRESSURE PRINCIPLE BACKFLOW ASSEMBLY

APPROVED
DIRECTOR OF PUBLIC WORKS

8/26/21
DATE

REVISION

STD. NO.
WD-27

SHEET 2 OF 2

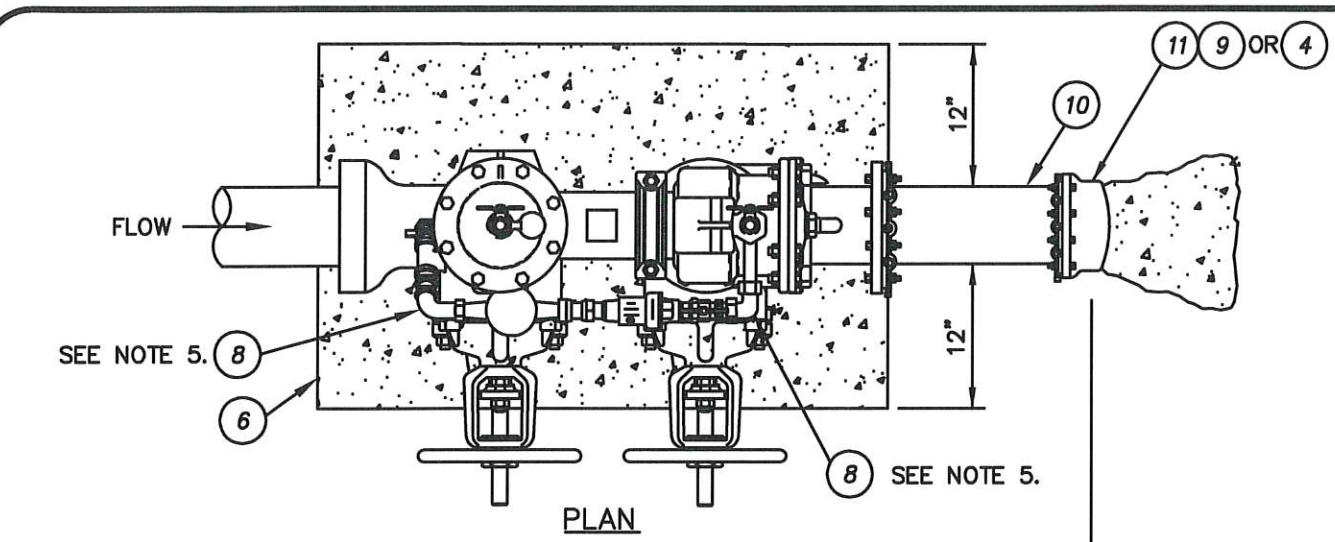

PLAN

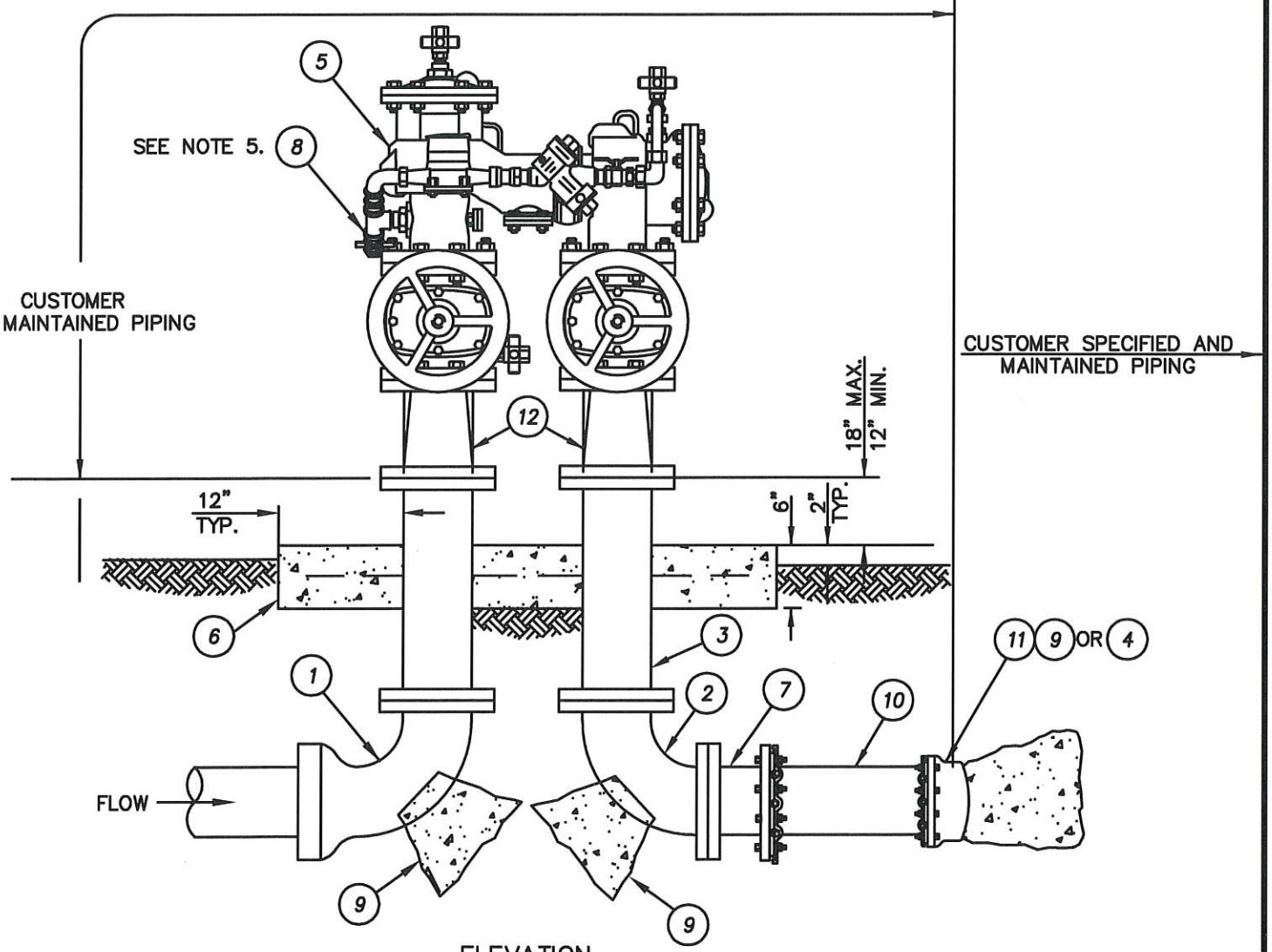

ELEVATION

CITY OF SOUTH GATE INCORPORATED JAN 20, 1923	CITY OF SOUTH GATE DEPARTMENT OF PUBLIC WORKS	DOUBLE CHECK BACKFLOW ASSEMBLY (N-PATTERN)	
	APPROVED DIRECTOR OF PUBLIC WORKS — DATE 8/26/21	REVISION	STD. NO. WD-28 SHEET 1 OF 2

ITEM	DESCRIPTION
1	DUCTILE IRON 90° BEND FLG x MJ
2	DUCTILE IRON 90° BEND FLG x FLG
3	DUCTILE IRON SPOOL FLG x FLG LENGTH AS REQUIRED
4	TRANSITION COUPLING (BY OTHERS, FOR ON-SITE CONNECTION WHEN ON-SITE PIPING EXISTS)
5	APPROVED N-PATTERN REDUCED PRESSURE PRINCIPLE BACKFLOW PREVENTION ASSEMBLY WITH RISING STEM RESILIENT WEDGE GATE VALVES
6	6" THICK P.C.C. SLAB, REINFORCE WITH W.W.F. 1.6 X 1.6
7	FLG X MJ ADAPTER WITH RETAINER GLAND
8	FACTORY INSTALLED BY-PASS METER ASSEMBLY CONSISTING OF APPROVED POSITIVE DISPLACEMENT METER, REDUCED PRESSURE PRINCIPLE DEVICE AND ASSOCIATED PIPING. METER TO BE USED FOR FIRE SYSTEMS ONLY
9	THRUST BLOCK PER STD. NO. W-35
10	DUCTILE IRON PIPE SECTION, 24" LONG
11	END CAP (IF REQUIRED)
12	4" DUCTILE IRON SPOOL F.E. X F.E. OR 4"x3" D.I. REDUCER F.E. x F.E. FOR 3" DOUBLE CHECK BACKFLOW ASSEMBLY

NOTES:

1. NOTIFY CITY PRIOR TO INSTALLATION OF BACKFLOW DEVICE.
2. BACKFLOW ASSEMBLY SHALL BE A MINIMUM OF 36" FROM ANY STRUCTURE, CURB OR SIDE WALK.
3. LOCATION OF BACKFLOW ASSEMBLY SHALL BE APPROVED BY THE ENGINEER.
4. PLACE BRASS PLUGS IN ALL TEST VALVE OUTLETS.
5. BY-PASS METER TO BE USED FOR FIRE SYSTEMS ONLY. DO NOT INSTALL BY-PASS METERS WHERE SUPPLY TO DEVICE IS ALREADY METERED.

CITY OF SOUTH GATE
INCORPORATED JAN 20, 1923

CITY OF SOUTH GATE
DEPARTMENT OF PUBLIC WORKS

DOUBLE CHECK BACKFLOW ASSEMBLY (N-PATTERN)

APPROVED

DIRECTOR OF PUBLIC WORKS

8/26/21
DATE

REVISION

STD. NO.
WD-28

SHEET 2 OF 2

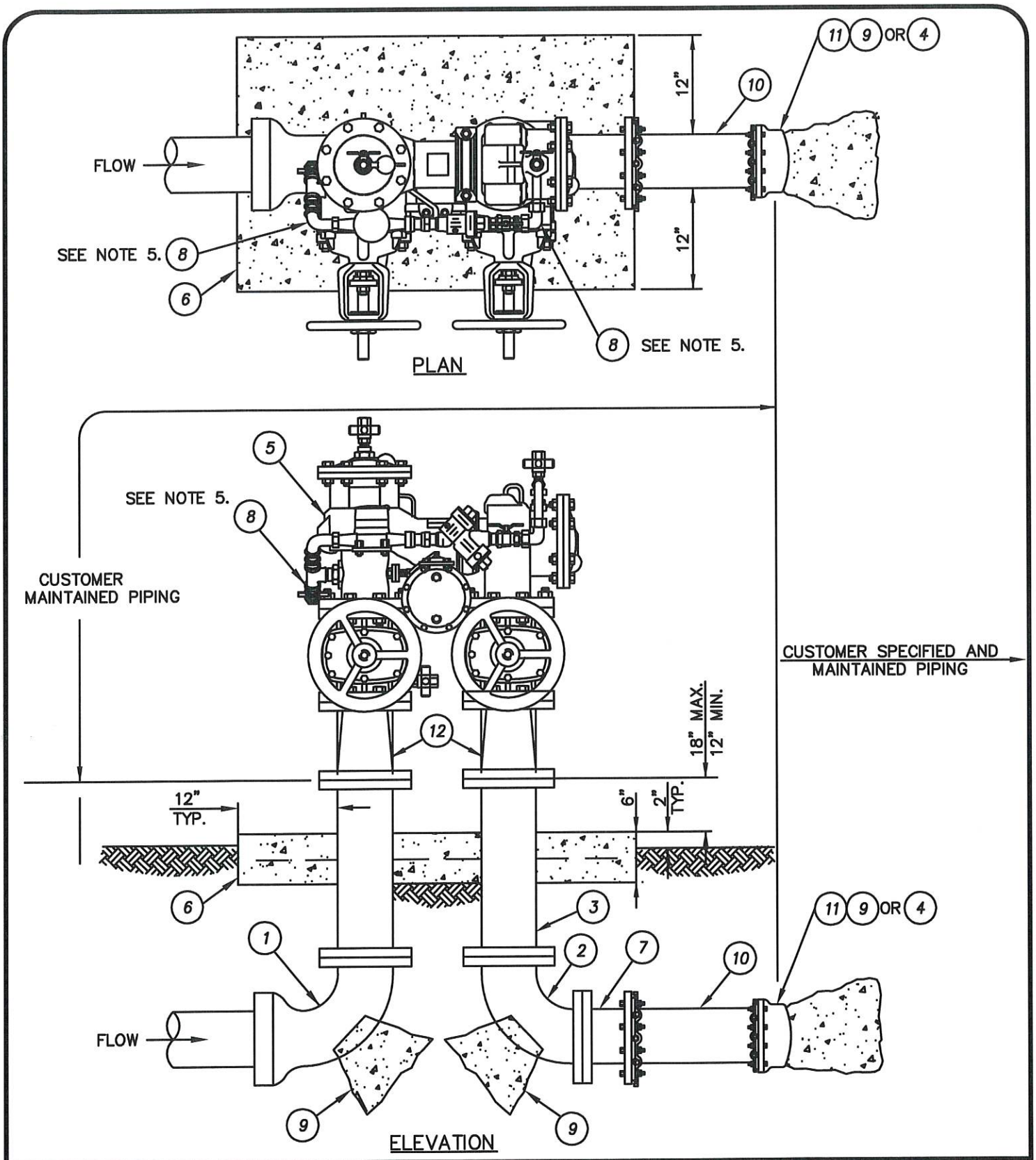

CITY OF SOUTH GATE
INCORPORATED JAN 20, 1923

CITY OF SOUTH GATE

DEPARTMENT OF PUBLIC WORKS

REDUCED PRESSURE PRINCIPLE BACKFLOW ASSEMBLY (N-PATTERN)

APPROVED

DIRECTOR OF PUBLIC WORKS

8/26/21

DATE

REVISION

STD. NO.

WD-29

SHEET 1 OF 2

ITEM	DESCRIPTION
1	DUCTILE IRON 90° BEND FLG x MJ
2	DUCTILE IRON 90° BEND FLG x FLG
3	DUCTILE IRON SPOOL FLG x FLG LENGTH AS REQUIRED
4	TRANSITION COUPLING (BY OTHERS, FOR ON-SITE CONNECTION WHEN ON-SITE PIPING EXISTS)
5	APPROVED N-PATTERN REDUCED PRESSURE PRINCIPLE BACKFLOW PREVENTION ASSEMBLY WITH RISING STEM RESILIENT WEDGE GATE VALVES
6	6" THICK P.C.C. SLAB, REINFORCE WITH W.W.F. 1.6 X 1.6
7	FLG X MJ ADAPTER WITH RETAINER GLAND
8	FACTORY INSTALLED BY-PASS METER ASSEMBLY CONSISTING OF APPROVED POSITIVE DISPLACEMENT METER, REDUCED PRESSURE PRINCIPLE DEVICE AND ASSOCIATED PIPING. METER TO BE USED FOR FIRE SYSTEMS ONLY
9	THRUST BLOCK PER STD. NO. W-35
10	DUCTILE IRON PIPE SECTION, 24" LONG
11	END CAP (IF REQUIRED)
12	4" DUCTILE IRON SPOOL F.E. X F.E. OR 4"x3" D.I. REDUCER F.E. x F.E. FOR 3" DOUBLE CHECK BACKFLOW ASSEMBLY

NOTES:

1. NOTIFY CITY PRIOR TO INSTALLATION OF BACKFLOW DEVICE.
2. BACKFLOW ASSEMBLY SHALL BE A MINIMUM OF 36" FROM ANY STRUCTURE, CURB OR SIDE WALK.
3. LOCATION OF BACKFLOW ASSEMBLY SHALL BE APPROVED BY THE ENGINEER.
4. PLACE BRASS PLUGS IN ALL TEST VALVE OUTLETS.
5. BY-PASS METER TO BE USED FOR FIRE SYSTEMS ONLY. DO NOT INSTALL BY-PASS METERS WHERE SUPPLY TO DEVICE IS ALREADY METERED.

CITY OF SOUTH GATE INCORPORATED JAN 20, 1923

CITY OF SOUTH GATE

DEPARTMENT OF PUBLIC WORKS

REDUCED PRESSURE PRINCIPLE BACKFLOW ASSEMBLY (N-PATTERN)

APPROVED

DIRECTOR OF PUBLIC WORKS

8/26/21

DATE

REVISION

STD. NO.

WD-29

SHEET 2 OF 2

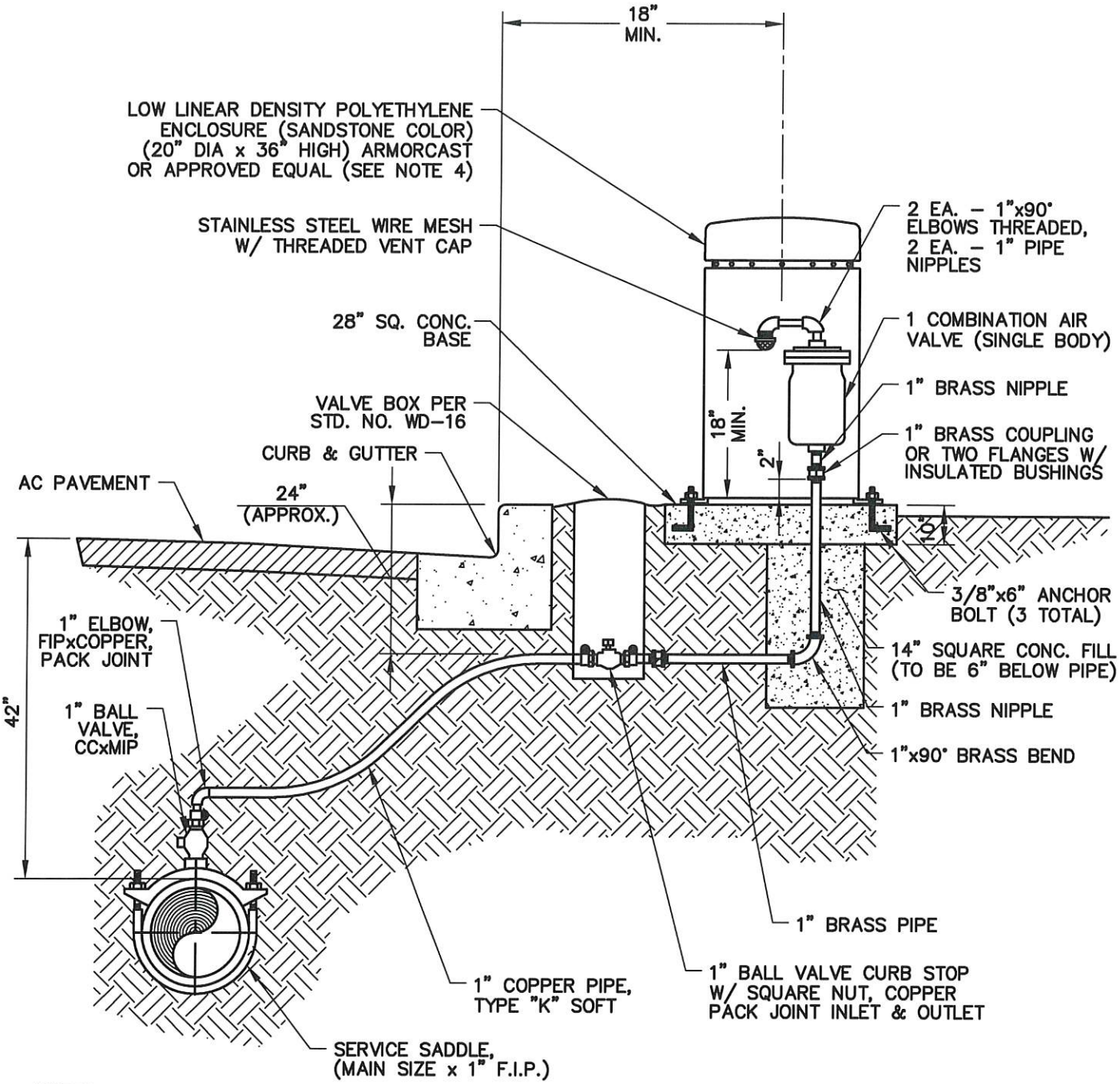

NOTES:

1. MAINTAIN POSITIVE SLOPE FROM MAIN TO AIR RELEASE VALVE.
2. SLIP-ON OR COPPER FITTINGS WITH SILVER SOLDER BRAZING SHALL BE USED IN LIEU OF COPPER PACK JOINTS.
3. AIR VALVE ASSEMBLY SHALL BE LOCATED PER STD. NO. WD-32.
4. AS AN ALTERNATIVE, THE ENCLOSURE CAN BE 12" DIA. x 24" HIGH.

CITY OF SOUTH GATE INCORPORATED JAN 20, 1923	CITY OF SOUTH GATE DEPARTMENT OF PUBLIC WORKS	**1-INCH COMBINATION AIR RELEASE AND VACUUM VALVE**	
	APPROVED DIRECTOR OF PUBLIC WORKS	8/26/21 DATE	REVISION
			STD. NO. **WD-30** SHEET 1 OF 1

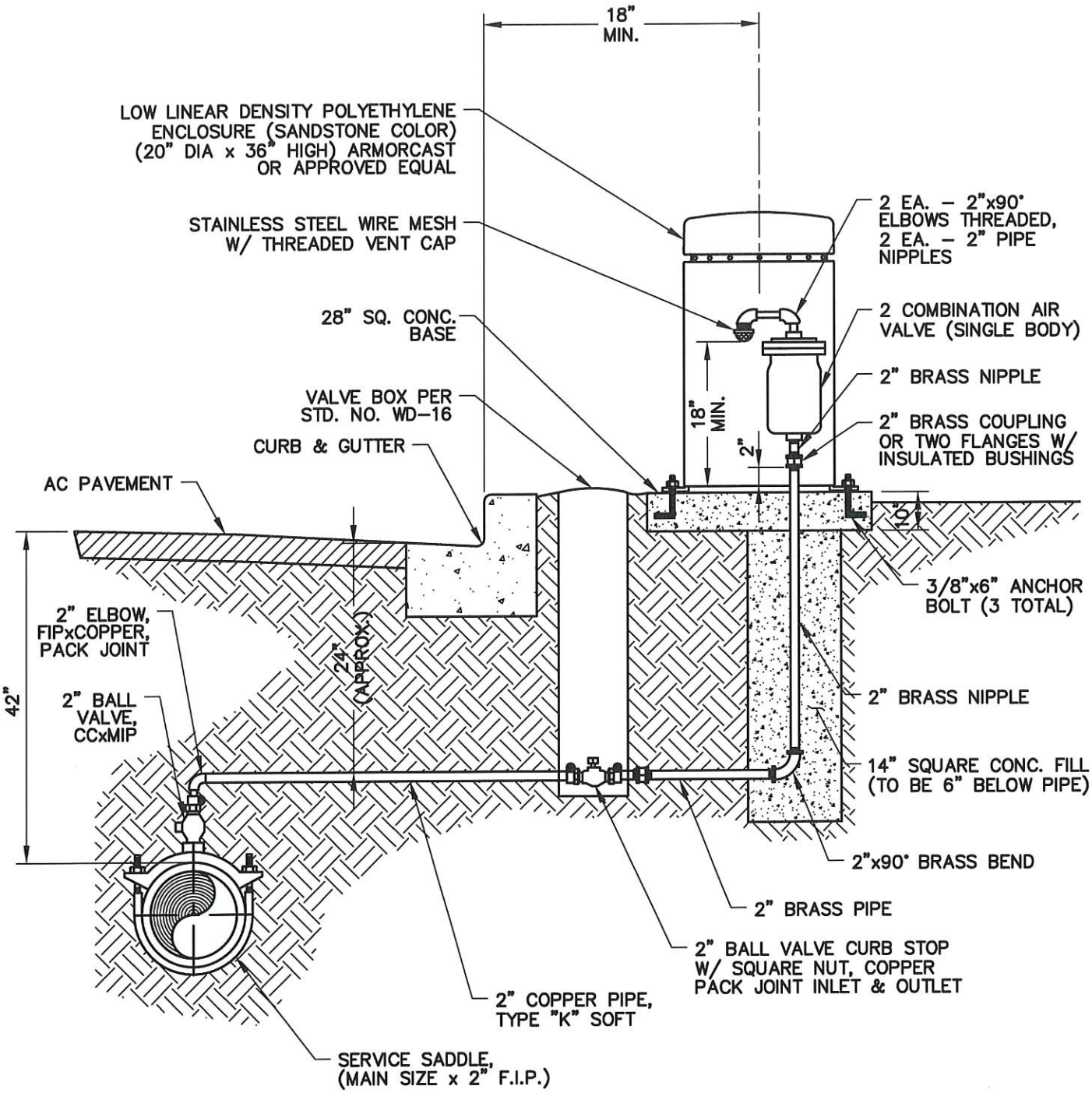

NOTES:

1. MAINTAIN POSITIVE SLOPE FROM MAIN TO AIR RELEASE VALVE.
2. SLIP-ON OR COPPER FITTINGS WITH SILVER SOLDER BRAZING SHALL BE USED IN LIEU OF COPPER PACK JOINTS.
3. AIR VALVE ASSEMBLY SHALL BE LOCATED PER STD. NO. WD-32.

CITY OF SOUTH GATE INCORPORATED JAN 20, 1923	CITY OF SOUTH GATE DEPARTMENT OF PUBLIC WORKS	**2-INCH COMBINATION AIR RELEASE AND VACUUM VALVE**	
	APPROVED DIRECTOR OF PUBLIC WORKS	8/26/21 DATE	REVISION
			STD. NO. **WD-31** SHEET 1 OF 1

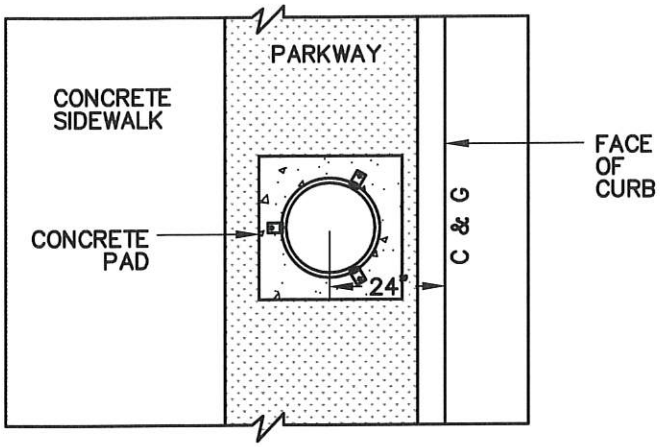

DETACHED SIDEWALK

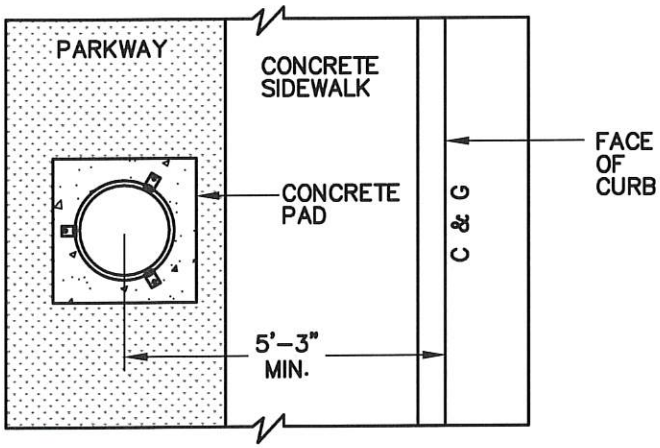

4' WIDE ATTACHED SIDEWALK

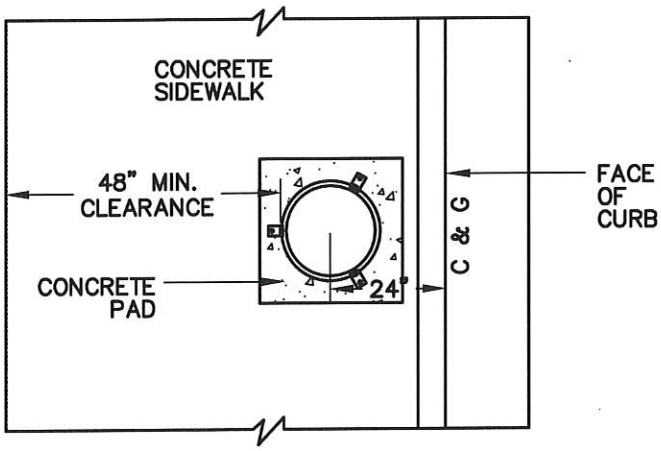

6' OR WIDER SIDEWALK

NOTE:

FOR ALL CASES, THE LOCATION OF AIR RELEASE AND VACUUM RELIEF ENCLOSURE SHALL MEET ADA REQUIREMENTS THAT A MINIMUM 48" CLEARANCE SHALL BE MAINTAINED FROM ANY OBSTRUCTION IN THE WALKWAY.

CITY OF SOUTH GATE INCORPORATED JAN 20, 1923	CITY OF SOUTH GATE DEPARTMENT OF PUBLIC WORKS	AIR RELEASE AND VACUUM VALVE ENCLOSURE SETBACK DETAIL	
	APPROVED DIRECTOR OF PUBLIC WORKS	8/26/21 DATE	REVISION STD. NO. WD-32 SHEET 1 OF 1

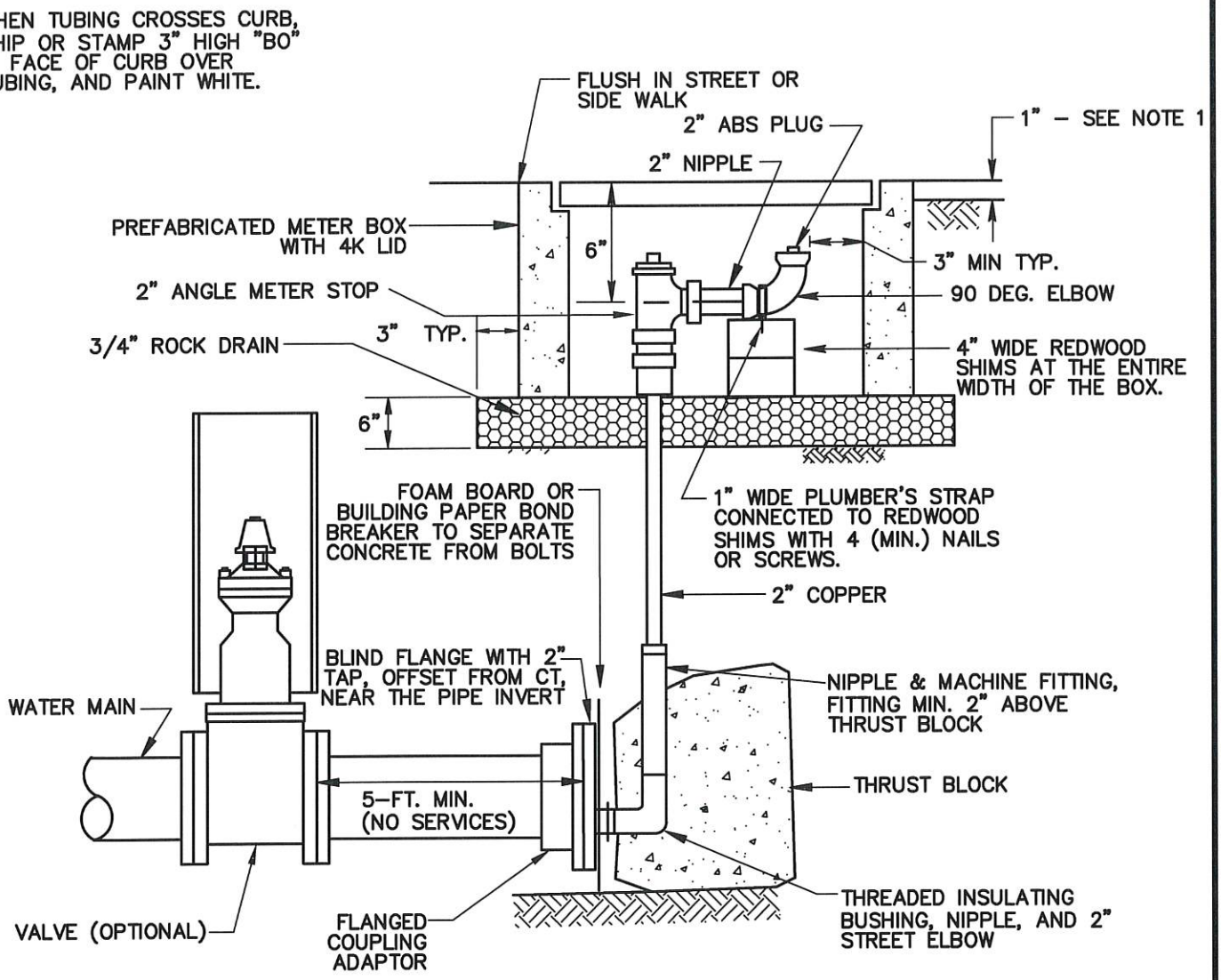

NOTES:

1. LOCATE METER BOX 1" ABOVE GRADE IN UNIMPROVED AREAS.
2. ALL PARTS TO BE BRASS OR BRONZE, EXCEPT 2" ABS PLUG.

CITY OF SOUTH GATE INCORPORATED JAN 20, 1923	CITY OF SOUTH GATE DEPARTMENT OF PUBLIC WORKS	DEAD-END BLOW-OFF	
	APPROVED DIRECTOR OF PUBLIC WORKS	8/26/21 DATE	REVISION
			STD. NO. WD-33 SHEET 1 OF 1

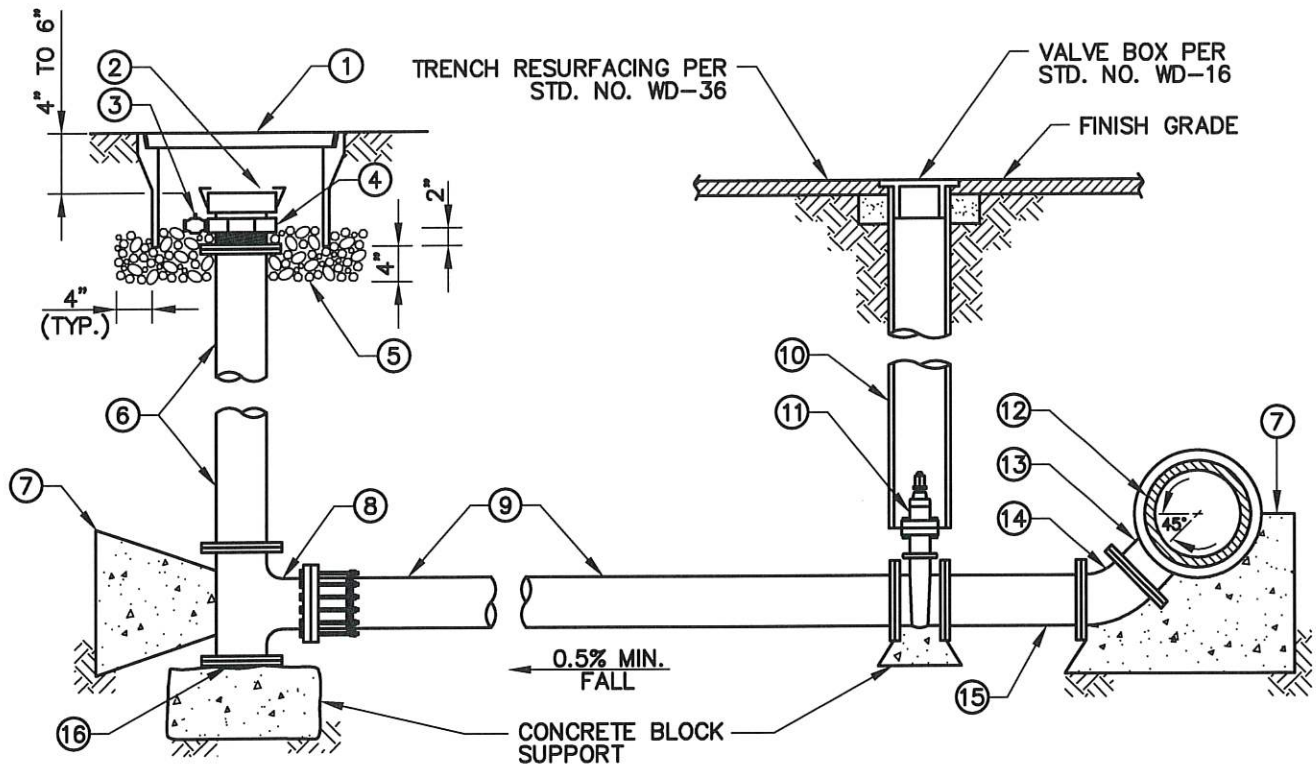

NOTES:

1. SET TOP OF METER BOX FLUSH WITH SIDEWALK, CURB OR FINISH GRADE.
2. BLOW-OFF ASSEMBLIES INSTALLED FOR THE USE OF RECYCLED WATER SHALL BE IDENTIFIED AS DESCRIBED IN SPECIFICATIONS.
3. CAM & GROOVE ADAPTER SHALL BE DRILLED AND TAPPED AS REQUIRED FOR THE PRESSURE PET COCK.

ITEM NO.	SIZE AND DESCRIPTION	ITEM NO.	SIZE AND DESCRIPTION
1	24" MH FRAME & COVER MARKED "WATER"	9	USE DUCTILE IRON PIPE
2	4" OR 6" CAM & GROOVE ADAPTER x MIPT WITH LOCKING DUST CAP, SEE NOTE 3	10	VALVE WELL FRAME AND COVER (SEE STD. NO. WD-16)
3	1/4" PRESSURE PET COCK	11	4" OR 6" FLG x MJ/FLG RWGV
4	4" OR 6" FLANGED COMPANION x FIPT	12	WATER MAIN
5	3/8" ROCK 4" TO 6" DEEP	13	SIZE x 4" OR 6" MJ/FLG x FLG TEE
6	4" OR 6" FLG DI PIPE x REQUIRED LENGTH (MAXIMUM OF 2 SPOOLS)	14	4" OR 6" FLANGED 45° BEND
7	CONCRETE THRUST BLOCK (SEE STD. NO. WD-35)	15	4" OR 6" x 24" FLG DI SPOOL
8	4" OR 6" FLG x FLG OR FLG X MJ TEE	16	4" OR 6" DI BLIND FLANGE

CITY OF SOUTH GATE
INCORPORATED JAN 20, 1923

CITY OF SOUTH GATE
DEPARTMENT OF PUBLIC WORKS

4 AND 6-INCH BLOW-OFF INSTALLATION

APPROVED

DIRECTOR OF PUBLIC WORKS

8/26/21
DATE

REVISION

STD. NO.
WD-34

SHEET 1 OF 1

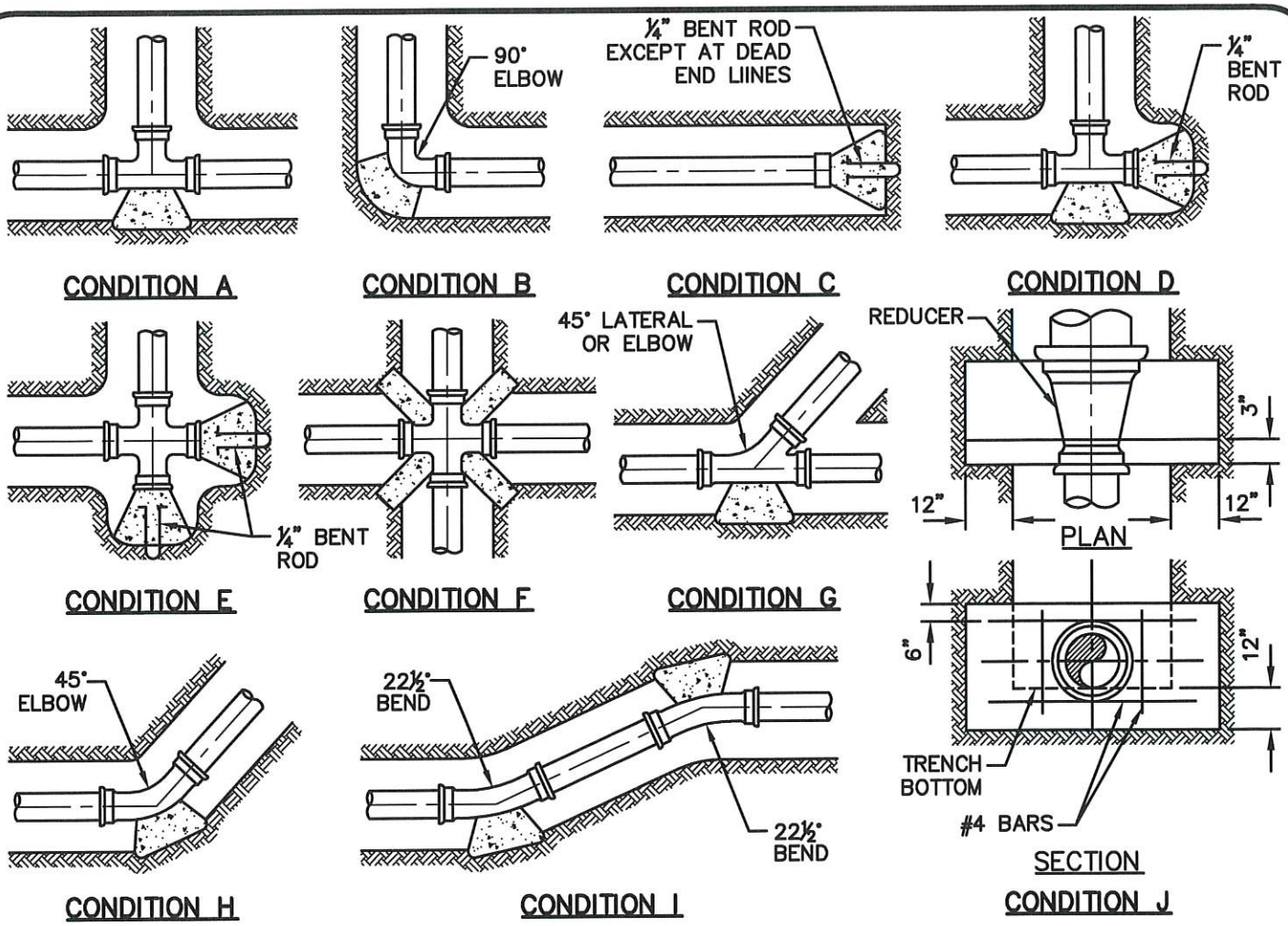

NOTES:

1. ALL BURIED BOLTS SHALL BE COATED WITH "BITUMASTIC NO. 50" OR APPROVED EQUAL.
2. THRUST BLOCK AREAS BASED ON 225 PSI PRESSURE AND 2,000 PSF ALLOWABLE SOIL PRESSURE WITH 2½ FEET OF COVER MINIMUM. ADDITIONAL BEARING AREA REQUIRED FOR SPECIAL CONDITIONS SHALL BE APPROVED BY THE ENGINEER.
3. THRUST BLOCK BEARING FACES SHALL BE PLACED AGAINST UNDISTURBED SOIL, APPROVED COMPACTED BACKFILL OR CLASS 100-E-100 SLURRY.
4. THRUST BLOCKS SHALL BE 560-C-3250 CONCRETE, UNLESS SPECIFIED OTHERWISE.
   A. INSTALL ¼" BEND ROD HANDLES.
   B. USE CARDBOARD SEPARATORS BETWEEN BLOCKS, IF NEEDED.

THRUST BLOCK BEARING AREA IN SQUARE FEET

PIPE SIZE	DESCRIPTION									
	A	B	C	D	E	F	G	H	I	J
4"	3.1	4.3	3.1	2 @ 3.1	2 @ 3.1	4 @ 1.2	2.3	2.3	2 @ 1.2	8.0
6"	6.3	8.9	6.3	2 @ 6.3	2 @ 6.3	4 @ 2.5	4.8	4.8	2 @ 2.5	9.0
8"	10.9	15.4	10.9	2 @ 10.9	2 @ 10.9	4 @ 4.2	8.3	8.3	2 @ 4.2	10.1
10"	16.3	28.1	16.3	2 @ 16.3	2 @ 16.3	4 @ 6.4	12.5	12.5	2 @ 6.4	11.3
12"	23.1	32.7	23.1	2 @ 23.1	2 @ 23.1	4 @ 9.0	17.7	17.7	2 @ 9.0	12.5
14"	31.0	43.9	31.0	2 @ 31.0	2 @ 31.0	4 @ 12.1	23.8	23.8	2 @ 12.1	13.8
16"	40.1	56.7	40.1	2 @ 40.1	2 @ 40.1	4 @ 15.7	30.7	30.7	2 @ 15.7	15.1

CITY OF SOUTH GATE
INCORPORATED JAN 20, 1923

CITY OF SOUTH GATE
DEPARTMENT OF PUBLIC WORKS

STANDARD THRUST BLOCK

APPROVED
DIRECTOR OF PUBLIC WORKS

8/26/21
DATE

REVISION

STD. NO.
WD-35

SHEET 1 OF 1

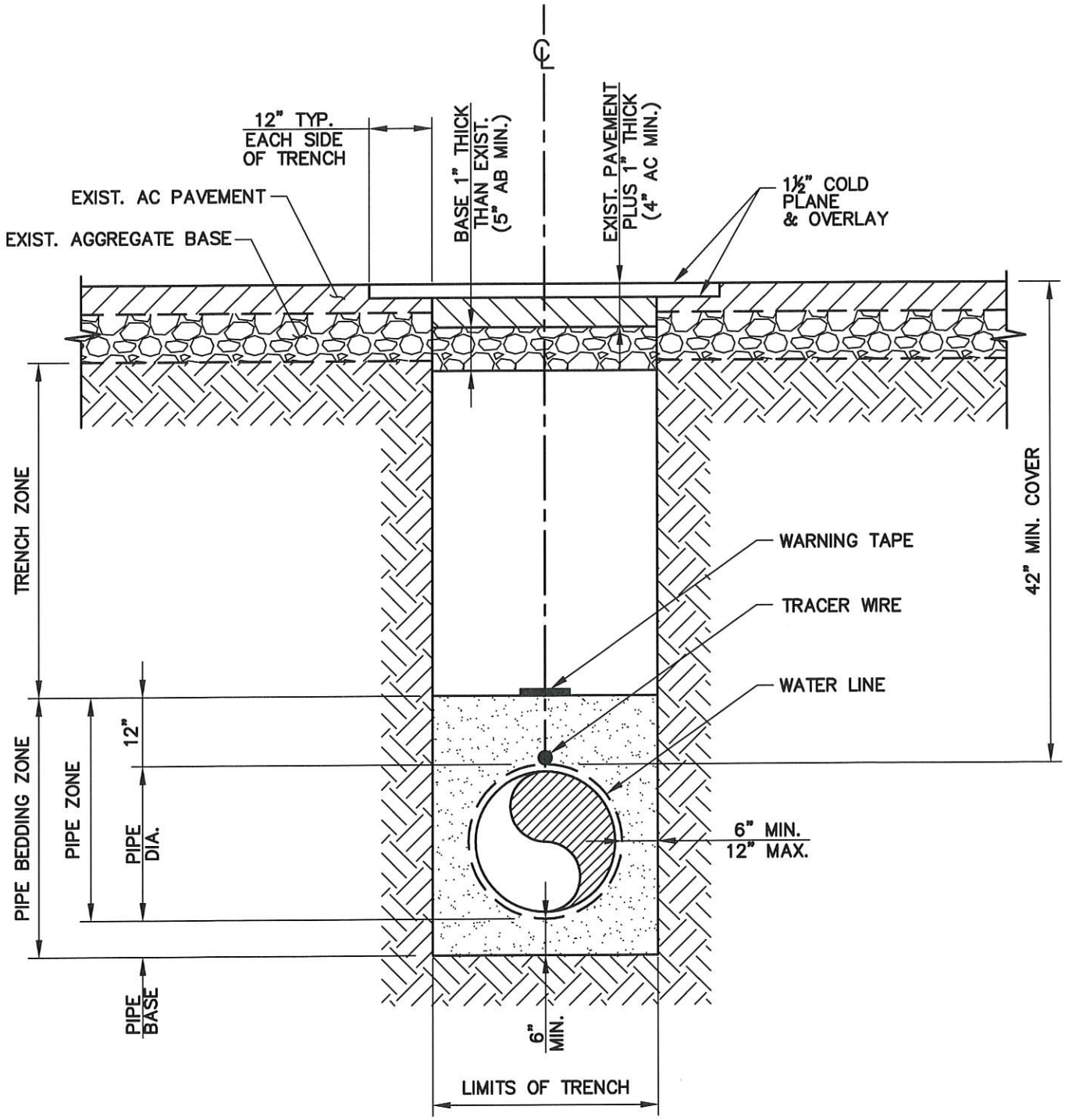

CITY OF SOUTH GATE DEPARTMENT OF PUBLIC WORKS	**PIPELINE BACKFILL**		
APPROVED DIRECTOR OF PUBLIC WORKS	8/26/21 DATE	REVISION	STD. NO. **WD-36** SHEET 1 OF 2

NOTES:

1. RELATIVE COMPACTION IN PIPE TRENCHES SHALL BE AS FOLLOWS:

   A. PIPE BASE AND PIPE ZONE: PIPE BASE AND PIPE ZONE–90% RELATIVE COMPACTION.

   B. TRENCH ZONE – NOT BENEATH PAVING: BACKFILL IN TRENCH ZONE NOT BENEATH PAVING–90% RELATIVE COMPACTION.

   C. TRENCH ZONE – PAVED AREAS: BACKFILL IN TRENCH ZONE IN PAVED AREAS–90% RELATIVE COMPACTION.

   D. STREET ZONE: TOP 18 INCHES OF TRENCH. BACKFILL IN STREET ZONE IN PAVED AREAS–95% RELATIVE COMPACTION.

   E. FOUNDATION STABILIZATION: ROCK REFILL MATERIAL FOR FOUNDATION STABILIZATION–90% RELATIVE DENSITY.

   F. OVEREXCAVATION: ROCK REFILL FOR OVEREXCAVATION–90% RELATIVE DENSITY.

   G. COMPACTION TESTS: PERFORM COMPACTION TESTS AT RANDOM DEPTHS AND AT 200–FOOT INTERVALS, AND AS DIRECTED BY ENGINEER.

2. CLEAR SPACE SHALL BE BETWEEN 6 INCHES AND 8 INCHES FOR PIPE DIAMETER 10 INCHES AND UNDER. FOR PIPE DIAMETER 12 INCHES AND GREATER, CLEAR SPACE SHALL BE 12 INCHES.

3. SAND–CEMENT SLURRY IN PIPE ZONE AND PIPE BASE SHALL CONSIST OF ONE SACK.

CITY OF SOUTH GATE INCORPORATED JAN 20, 1923	CITY OF SOUTH GATE DEPARTMENT OF PUBLIC WORKS	PIPELINE BACKFILL		
	APPROVED DIRECTOR OF PUBLIC WORKS	8/26/21 DATE	REVISION	STD. NO. WD-36 SHEET 2 OF 2

NEW POTABLE WATER LINE

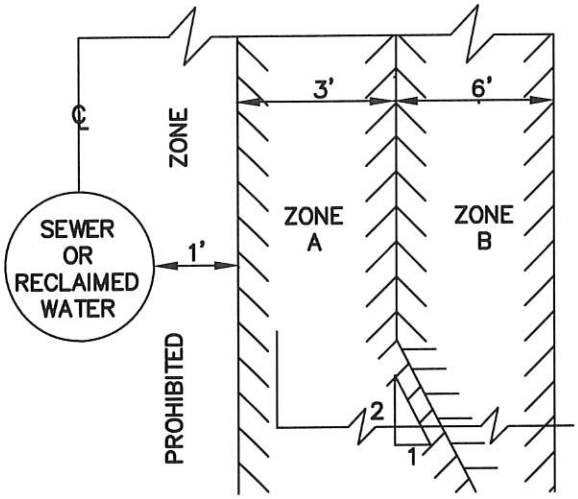

PARALLEL CONSTRUCTION

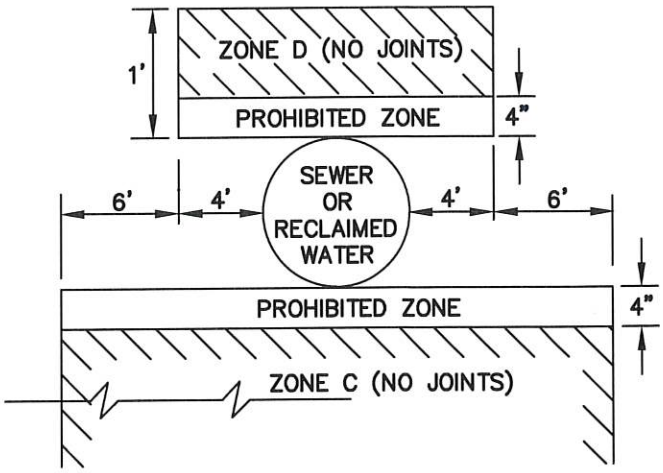

PERPENDICULAR CROSSING

IF ANY WATER LINE IS TO BE CONSTRUCTED WITHIN ANY OF THE ABOVE INDICATED ZONES, SPECIAL CONSTRUCTION SHALL BE REQUIRED AS DESCRIBED BELOW.

ZONE DOMESTIC WATER (SEE GENERAL NOTE 3)

A. DO NOT LOCATE ANY PARALLEL DOMESTIC WATER LINE IN THIS AREA A WITHOUT STATE AND LOCAL HEALTH DEPARTMENT APPROVAL.

B. USE D.I.P., WELDED CML & C STEEL OR CLASS 200 P.V.C. – AWWA C900.

C. USE D.I.P., WELDED CML & C STEEL OR CLASS 200 P.V.C. – AWWA C900.

D. USE D.I.P., WELDED CML & C STEEL OR CLASS 200 P.V.C. – AWWA C900.

CITY OF SOUTH GATE INCORPORATED JAN 20, 1923	CITY OF SOUTH GATE DEPARTMENT OF PUBLIC WORKS	**PIPELINE SEPARATION REQUIREMENTS**	
	APPROVED DIRECTOR OF PUBLIC WORKS — DATE 8/26/21	REVISION	STD. NO. **WD-37** SHEET 1 OF 3

NEW SEWER & RECYCLED WATER LINES

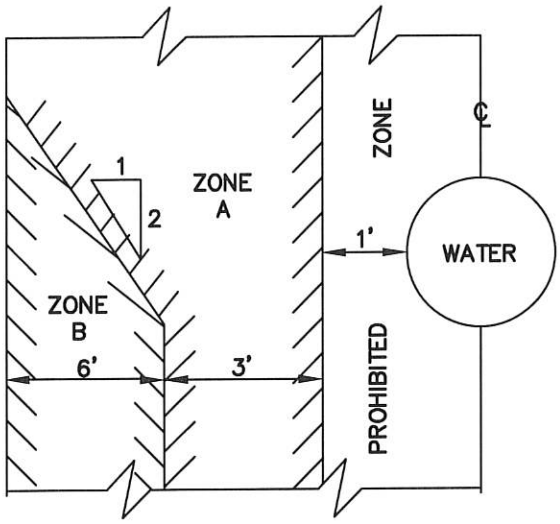

PARALLEL CONSTRUCTION

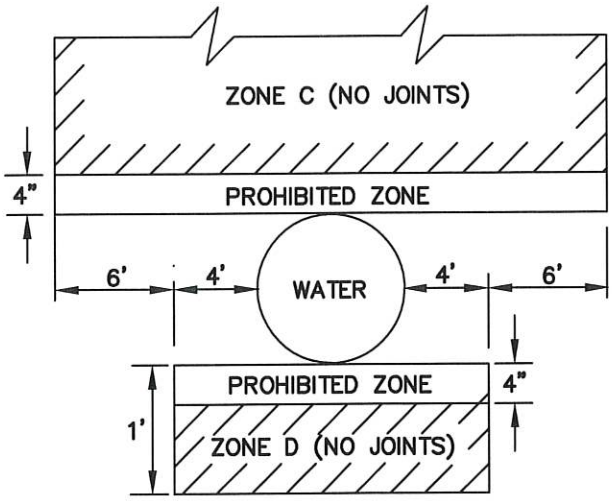

PERPENDICULAR CROSSING

IF ANY SEWER OR RECLAIMED WATER PIPELINES ARE TO BE CONSTRUCTED WITHIN ANY OF THE ABOVE INDICATED ZONES, SPECIAL CONSTRUCTION SHALL BE REQUIRED AS DESCRIBED BELOW.

ZONE	SEWER	RECYCLED WATER
A.	DO NOT LOCATE ANY PARALLEL SEWER OR RECLAIMED WATER LINES IN THIS AREA WITHOUT A STATE AND LOCAL HEALTH DEPARTMENT APPROVAL.	
B.	USE V.C.P., CLASS 200 PVC OR D.I.P. WITH COMPRESSION JOINTS.	USE D.I.P., WELDED CML & C STEEL OR CLASS 200 P.V.C. – AWWA C900
C.	USE D.I.P. WITH MECHANICAL JOINTS OR CLASS 200 P.V.C. – AWWA C900	USE D.I.P., WELDED CML & C STEEL OR CLASS 200 P.V.C. – AWWA C900
D.	USE D.I.P. OR CLASS 200 P.V.C. –	USE D.I.P., WELDED CML & C STEEL OR

CITY OF SOUTH GATE DEPARTMENT OF PUBLIC WORKS	**PIPELINE SEPARATION REQUIREMENTS**		
APPROVED DIRECTOR OF PUBLIC WORKS	8/26/21 DATE	REVISION	STD. NO. **WD-37** SHEET 2 OF 3

BASIC SEPARATION STANDARDS

1. PARALLEL CONSTRUCTION: THE HORIZONTAL DISTANCE BETWEEN DOMESTIC WATER AND RECLAIMED WATER LINES AND SEWER LINES SHALL BE AT LEAST 10 FEET, OUTSIDE OF PIPE TO OUTSIDE OF PIPE.

2. PERPENDICULAR CONSTRUCTION (CROSSING): WATER LINES SHALL BE AT LEAST ONE FOOT ABOVE SEWER AND RECLAIMED WATER LINES WHERE THESE LINES MUST CROSS.

3. SPECIAL PROVISIONS: WHERE THE BASIC SEPARATION STANDARDS CANNOT BE ATTAINED ALTERNATIVE CONSTRUCTION CRITERIA ARE SHOWN BELOW:

GENERAL NOTES:

1. NO PIPE JOINTS SHALL BE PERMITTED WITHIN ZONE D. IT IS THE INTENT OF THESE REQUIREMENTS NO JOINTS SHALL OCCUR WITHIN ZONE C. IF THAT CANNOT BE ACCOMPLISHED, THE NEW LINE SHALL BE ENCASED FOR THE FULL LENGTH OF ZONE C.

2. SEWER FORCE MAINS SHALL NOT BE PERMITTED IN ZONES A THROUGH D.

3. THE MATERIALS OF NEW LINE'S AT CROSSINGS SHALL BE CONSISTENT WITH OTHER NEW MATERIALS I.E, STEEL ON A STEEL LINE.

4. THESE CONSTRUCTION CRITERIA APPLY TO HOUSE SEWER LATERALS THAT CROSS ABOVE A WATER MAIN, BUT NOT TO THOSE THAT CROSS BELOW A WATER LINE.

CITY OF SOUTH GATE INCORPORATED JAN 20, 1923	CITY OF SOUTH GATE DEPARTMENT OF PUBLIC WORKS	PIPELINE SEPARATION REQUIREMENTS	
	APPROVED DIRECTOR OF PUBLIC WORKS — DATE 8/26/21	REVISION	STD. NO. WD-37 SHEET 3 OF 3

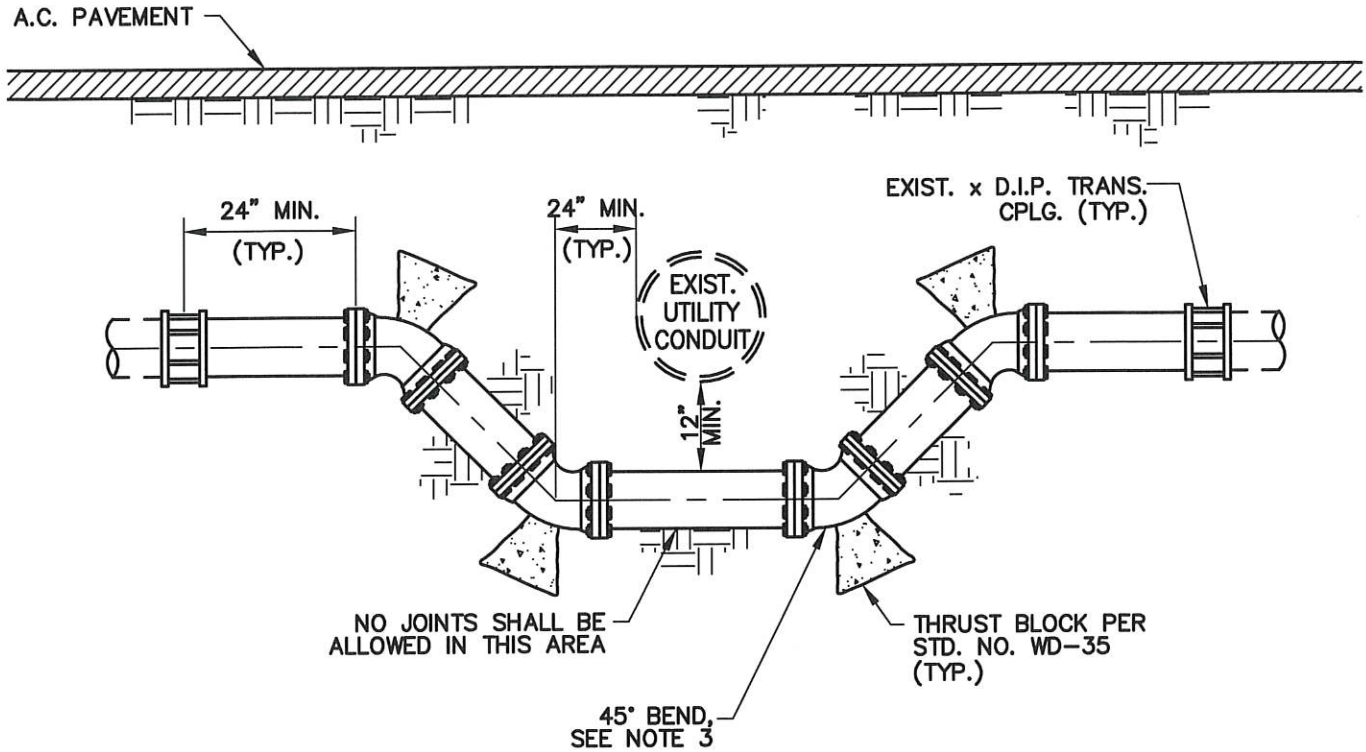

NOTES:

1. ALL PIPE JOINTS AT 90° BENDS SHALL BE RESTRAINED. FLANGED JOINTS MAY BE USED WHERE CONDITIONS WARRANT.
2. INSTALLATION SHALL BE ENCASED IN A POLYETHYLENE WRAP PER AWWA STANDARD C105.
3. ALL PIPE JOINTS SHALL BE RESTRAINED.
4. TRENCH BACKFILL AND BEDDING SHALL BE AS SHOWN ON STD. NO. WD-36.

CITY OF SOUTH GATE INCORPORATED JAN 20, 1923	CITY OF SOUTH GATE DEPARTMENT OF PUBLIC WORKS	UTILITY UNDER CROSSING	
	APPROVED DIRECTOR OF PUBLIC WORKS	8/26/21 DATE	REVISION
			STD. NO. WD-38 SHEET 1 OF 1

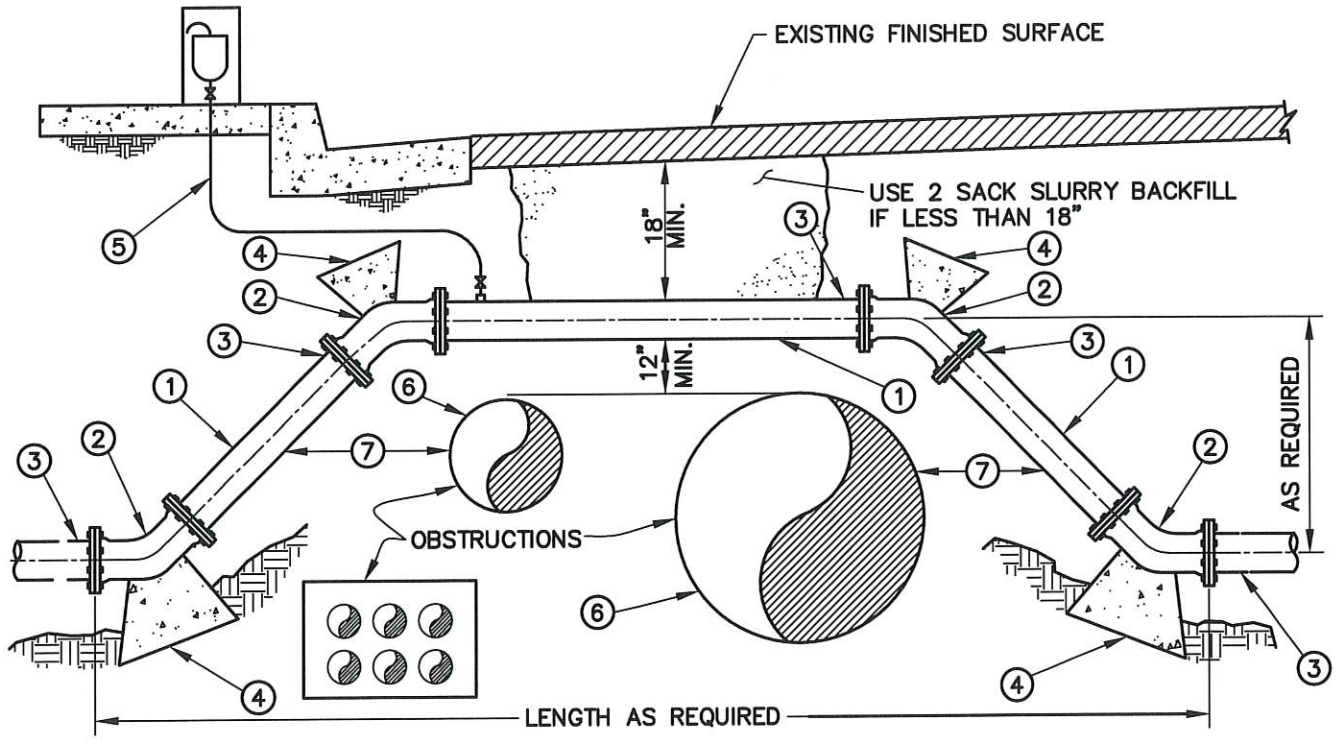

CONSTRUCTION NOTES:

1. DUCTILE IRON FLANGED SPOOL (LENGTH AS REQUIRED).
2. 45° DUCTILE IRON FLANGED BEND.
3. MJ x FLG ADAPTOR (IF REQUIRED).
4. THRUST BLOCK PER STD. NO. WD-35.
5. 1" AIR RELEASE ASSEMBLY PER STD. NO. WD-30 (INSTALL ON HIGH END), IF REQUIRED.
6. SEE STD. NO. WD-37 IF OBSTRUCTIONS ARE SEWER OR STORM DRAIN MAINS.
7. SEPARATION REQUIREMENT PER STD. NO. WD-37.

NOTE: COAT ALL EXPOSED BOLTS WITH 3M EC-244 COATING OR APPROVED EQUAL.

CITY OF SOUTH GATE INCORPORATED JAN 20, 1923	CITY OF SOUTH GATE DEPARTMENT OF PUBLIC WORKS	UTILITY OVER CROSSING	
	APPROVED DIRECTOR OF PUBLIC WORKS	8/26/21 DATE	REVISION
			STD. NO. WD-39 SHEET 1 OF 1

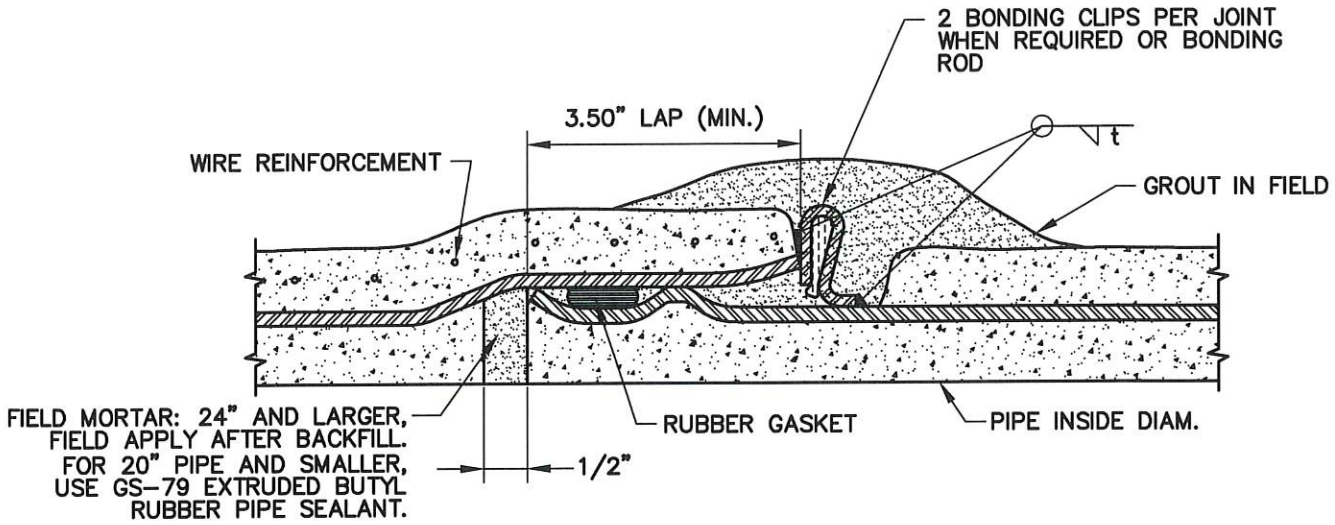

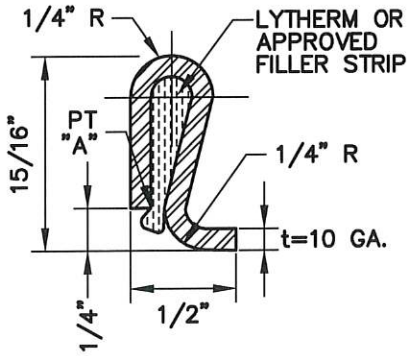

BONDING CLIP NOTES

1. BONDING CLIPS SHALL BE LOCATED AT THE SPRING LINE OF THE PIPE.
2. BONDING CLIPS SHALL BE MADE OF ASTM A366 STEEL WITH A CUT LENGTH OF 2-1/2-INCHES AND WIDTH OF 1-1/4-INCH.
3. LYTHERM FILLER STRIP SHALL BE 1-INCH X 1-1/2-INCH WIDE TO OVERLAP SIDES OF CLIP CONTRACTOR SHALL CRIMP BONDING CLIP OVER FILLER AT PT. "A" TO COMPRESS FILLER.

BELL AND SPIGOT RUBBER GASKET JOINT

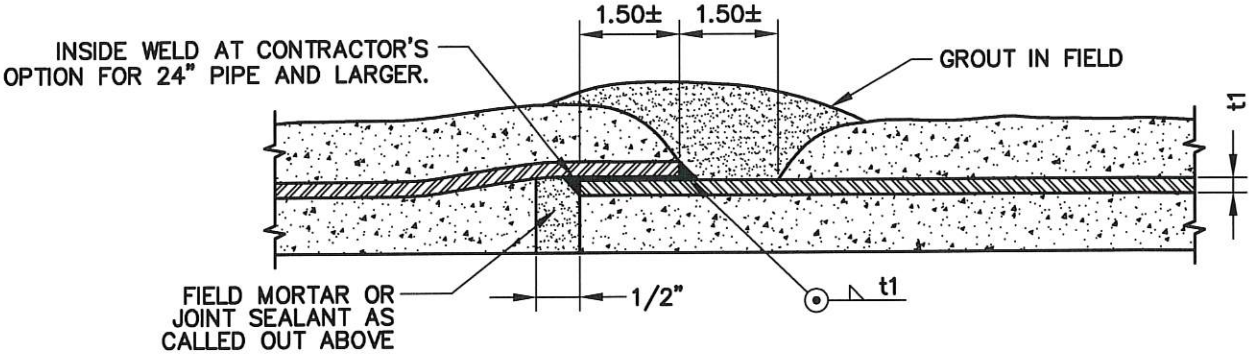

LAP WELD SLIP JOINT

NOTE:

1. SEE SPECIFICATIONS FOR STEEL PIPE SHELL THICKNESS, MORTAR LINING AND COATING THICKNESS, AND INSTALLATION REQUIREMENTS.

CITY OF SOUTH GATE — INCORPORATED JAN 20, 1923	CITY OF SOUTH GATE DEPARTMENT OF PUBLIC WORKS	CEMENT MORTAR LINED AND COATED STEEL PIPE JOINT DETAILS	
APPROVED DIRECTOR OF PUBLIC WORKS	8/26/21 DATE	REVISION	STD. NO. WD-40 SHEET 1 OF 1

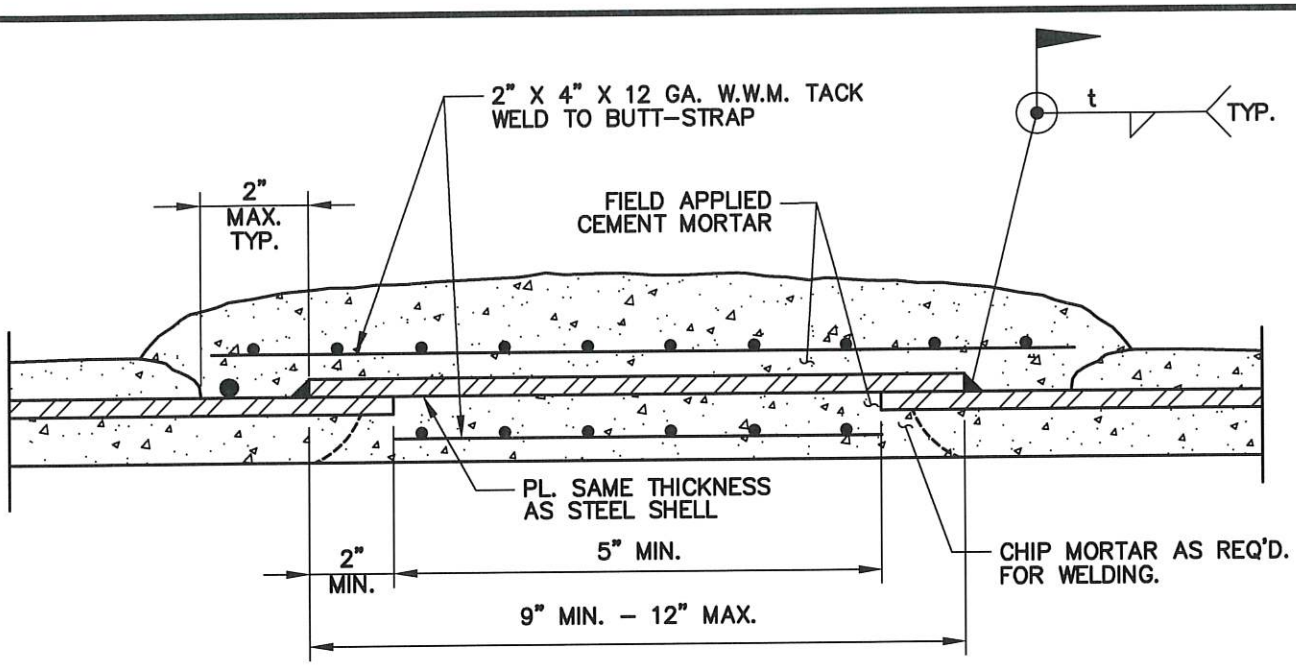

BUTTSTRAP CLOSURE

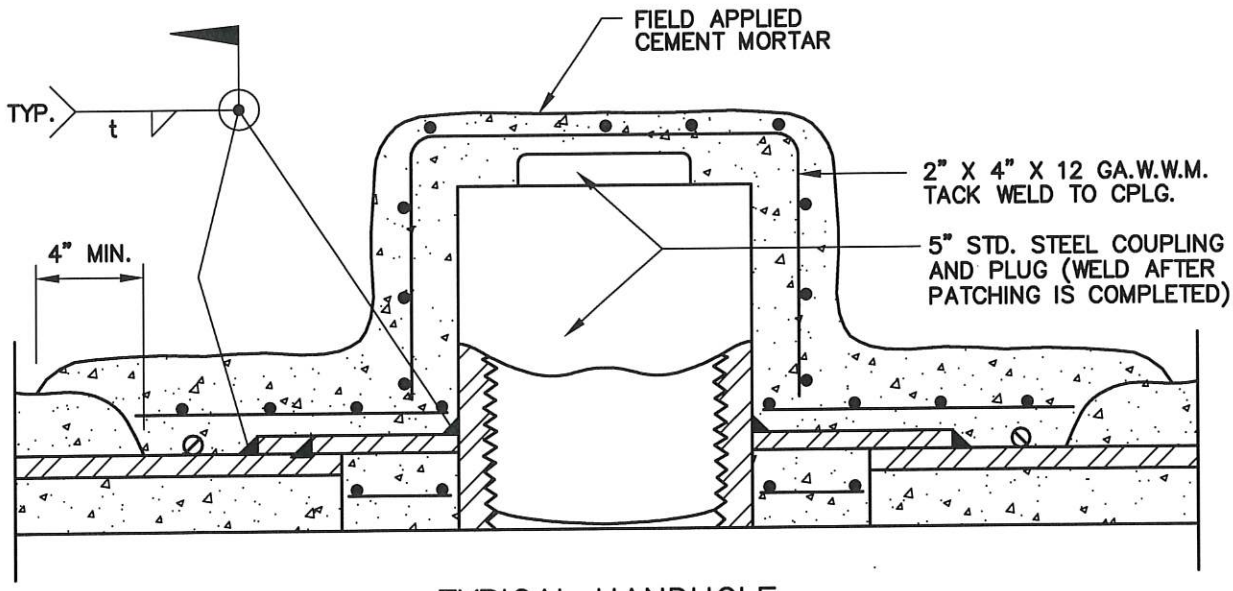

TYPICAL HANDHOLE
(REQUIRED ON PIPE SMALLER THAN 24" DIAMETER)

NOTE:

1. SEE SPECIFICATIONS FOR STEEL PIPE SHELL THICKNESS, MORTAR LINING AND COATING THICKNESS, AND INSTALLATION REQUIREMENTS.

CITY OF SOUTH GATE INCORPORATED JAN 20, 1923	CITY OF SOUTH GATE DEPARTMENT OF PUBLIC WORKS	CEMENT MORTAR LINED AND COATED STEEL PIPE CLOSURE AND HANDHOLE DETAILS	
	APPROVED DIRECTOR OF PUBLIC WORKS	8/26/21 DATE	REVISION
			STD. NO. WD-41 SHEET 1 OF 1

STEEL CASING SCHEDULE		
NOMINAL CARRIER PIPE SIZE	MINIMUM CASING SIZE	MIN. WALL THICK.
4"	12" O.D.	1/4"
6"	14" O.D.	1/4"
8"	16" O.D.	5/16"
10"	18" O.D.	5/16"
12"	20" O.D.	3/8"
16"	24" O.D.	3/8"
18"	30" O.D.	1/2"
24"	42" O.D.	1/2"
36"	51" O.D.	1/2"

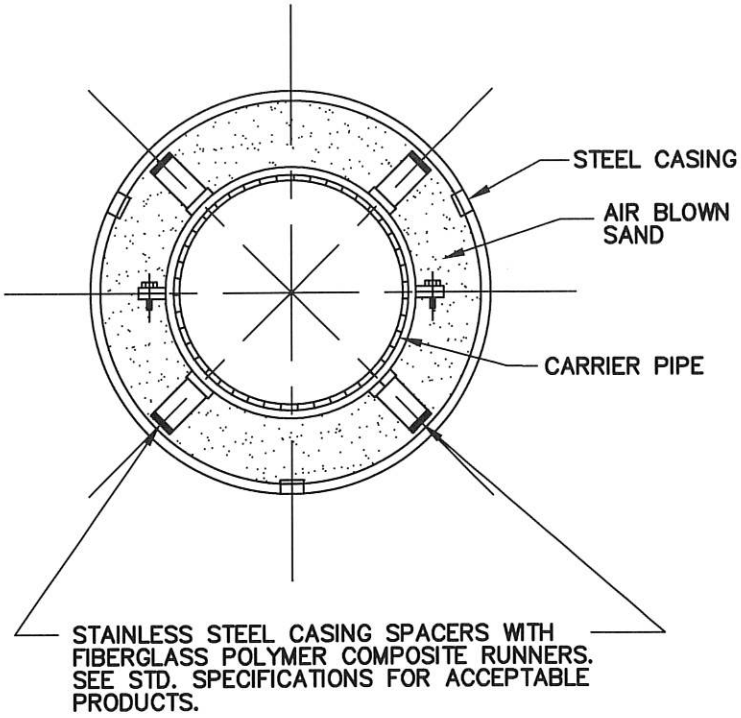

NOTES:

1. CASING SHALL BE INSTALLED BY THE BORE, JACK AND/OR TUNNEL METHOD.
2. SIZE AND THICKNESS OF CASING SHALL BE AS SHOWN IN SCHEDULE. FOR LONG BORES OR SPECIAL SITUATIONS, GREATER WALL THICKNESS THAN SHOWN IN THE SCHEDULE MAY BE REQUIRED.
3. ALL STEEL CASING PIPE FIELD JOINTS SHALL BE WELDED FULL–CIRCUMFERENCE.
4. CARRIER PIPE SHALL BE PRESSURE TESTED PRIOR TO FILLING CASING.
5. EACH END OF CASING SHALL BE SEALED WITH APPROVED RUBBER CASING END SEALS.
6. CONTRACTOR SHALL FURNISH ALL NECESSARY THRUST RESTRAINT DEVICES.
7. BACKFILL FOR CASING IN OPEN CUT TRENCH SHALL BE IN ACCORDANCE WITH STD. NO. WD–36.
8. BACKFILL ANNULAR SPACE WITH AIR BLOWN SAND.
9. PROVIDE GROUT CONNECTIONS PER STD. SPECIFICATIONS.

CITY OF SOUTH GATE
INCORPORATED JAN 20, 1923

CITY OF SOUTH GATE
DEPARTMENT OF PUBLIC WORKS

STEEL CASING PIPE

APPROVED

DIRECTOR OF PUBLIC WORKS

8/26/21
DATE

REVISION

STD. NO.
WD-42

SHEET 1 OF 1

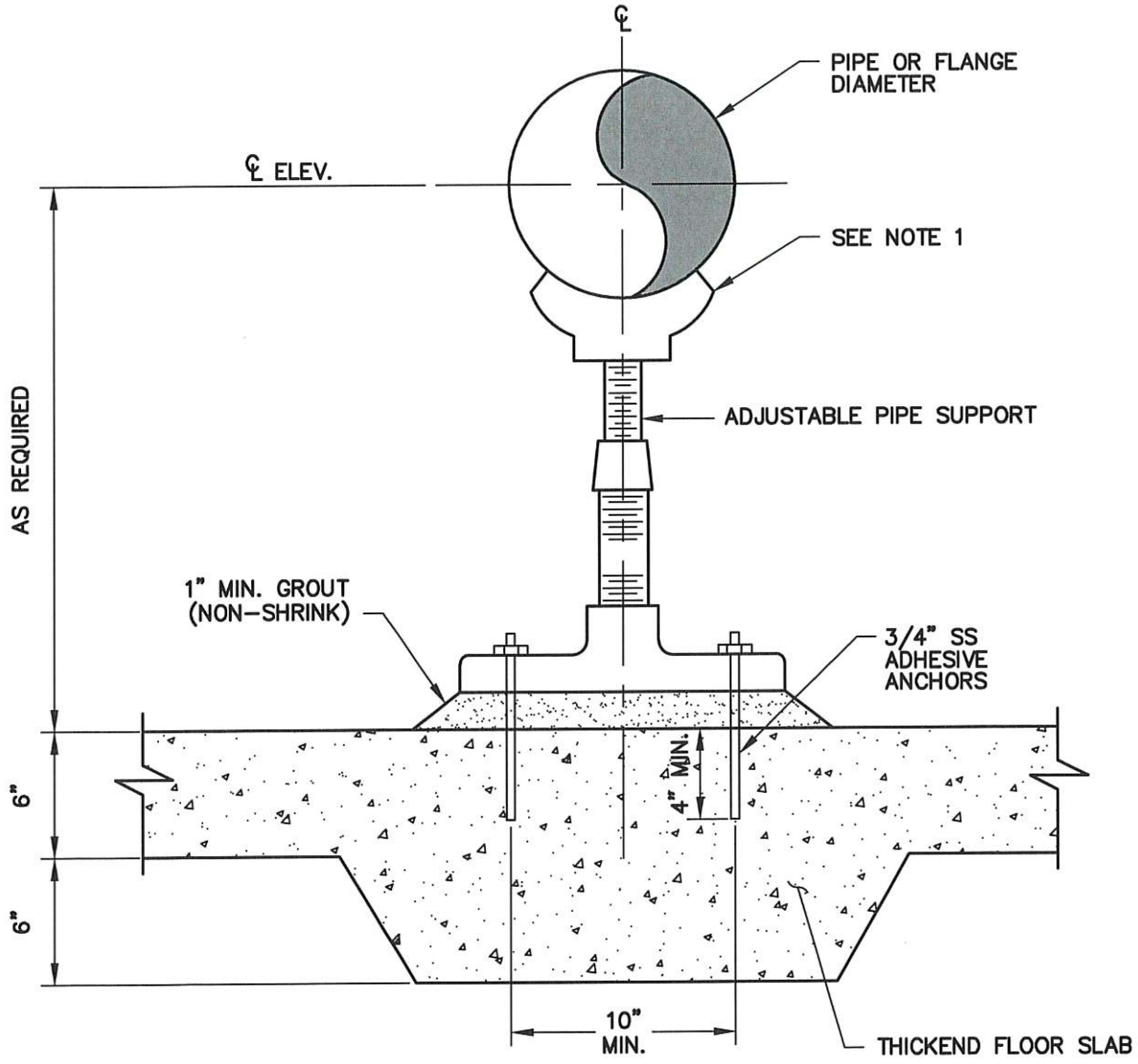

NOTE:

1. PIPE SUPPORT MAY BE BOLT-MOUNTED TO FLANGED JOINTS.

CITY OF SOUTH GATE INCORPORATED JAN 20, 1923	CITY OF SOUTH GATE DEPARTMENT OF PUBLIC WORKS	**ADJUSTABLE PIPE SUPPORT (INSIDE)**	
	APPROVED DIRECTOR OF PUBLIC WORKS	8/26/21 DATE	REVISION
			STD. NO. **WD-43** SHEET 1 OF 1

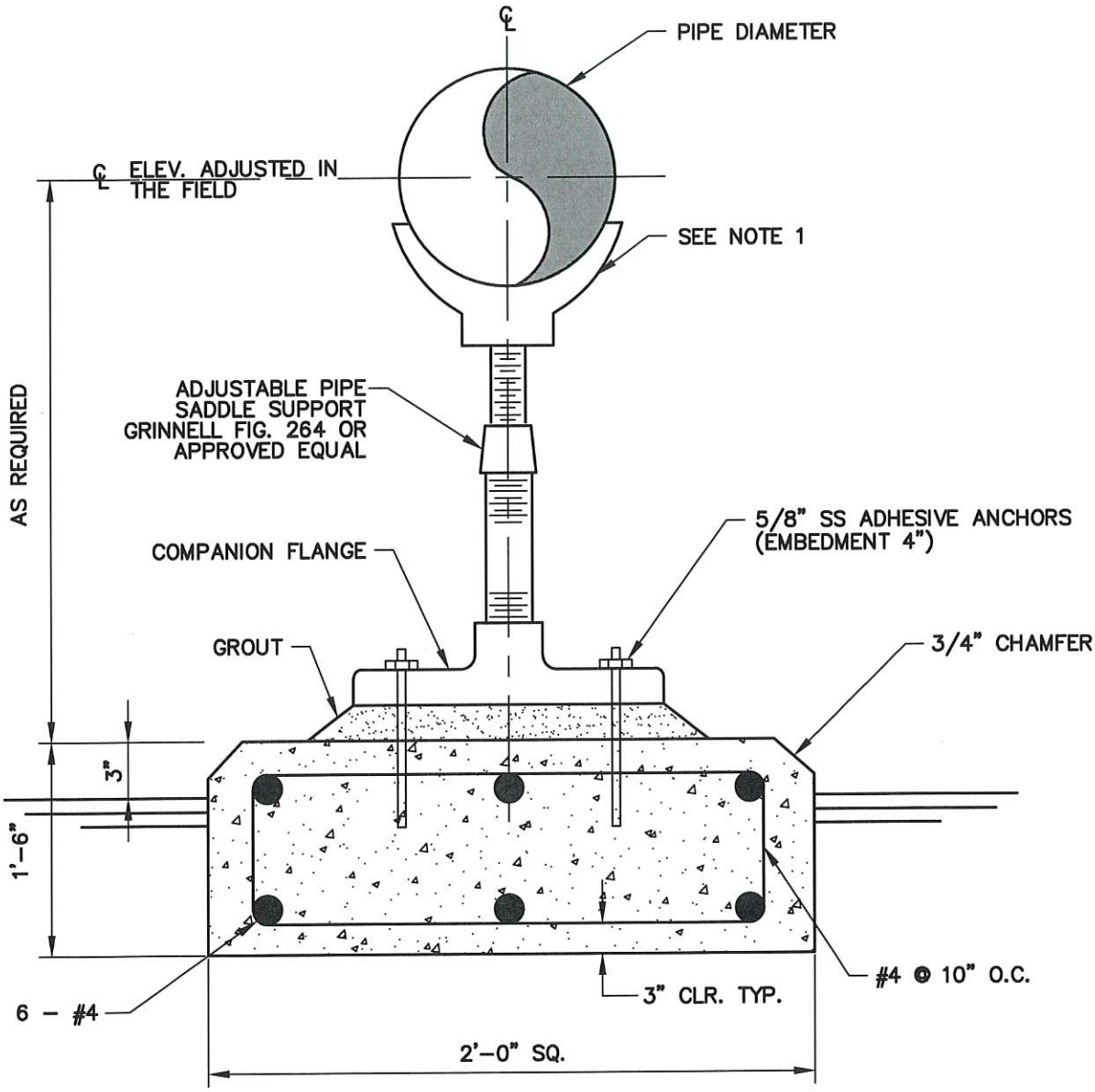

NOTE:

1. PIPE SUPPORT MAY BE BOLT-MOUNTED TO FLANGED JOINTS.

CITY OF SOUTH GATE INCORPORATED JAN 20, 1923	CITY OF SOUTH GATE DEPARTMENT OF PUBLIC WORKS	ADJUSTABLE PIPE SUPPORT (OUTSIDE)	
	APPROVED DIRECTOR OF PUBLIC WORKS — DATE 8/26/21	REVISION	STD. NO. WD-44 SHEET 1 OF 1

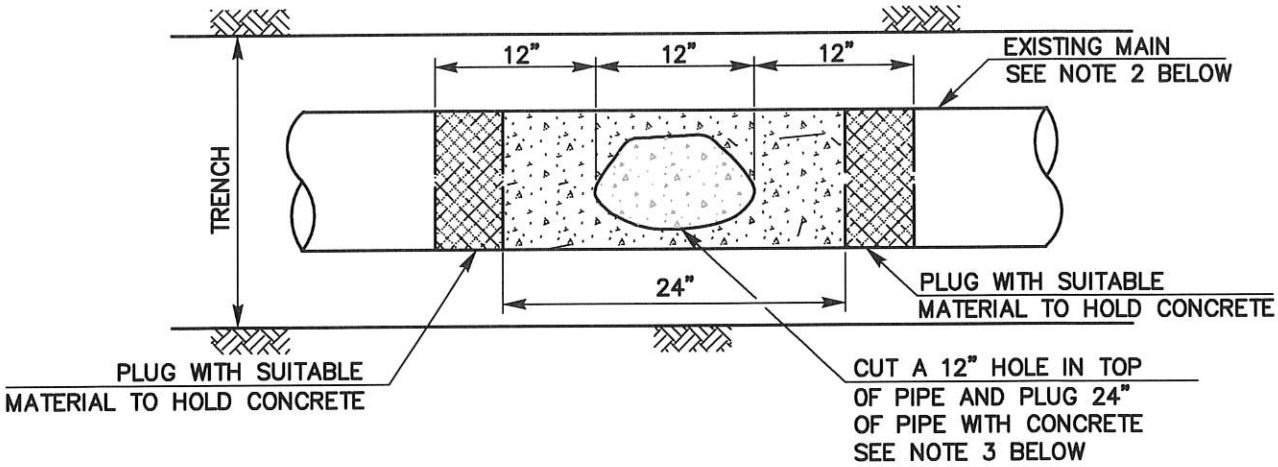

MIDDLE OF EXISTING MAIN

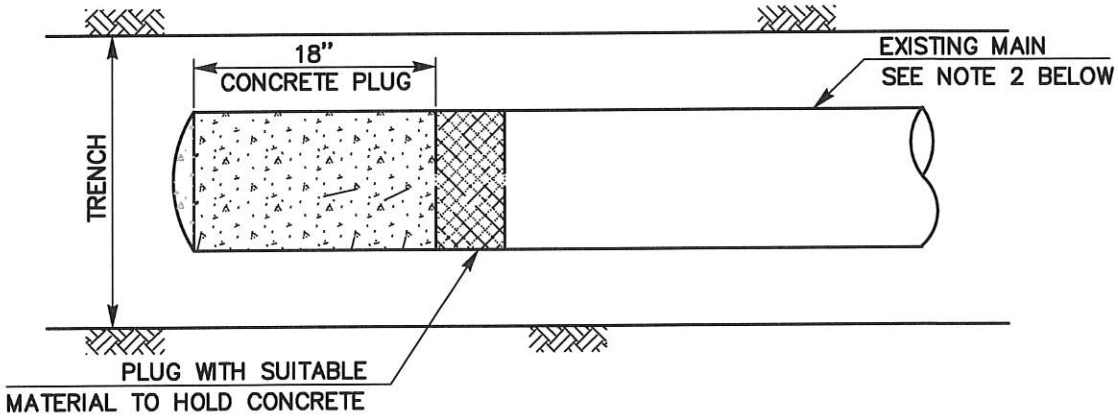

END OF EXISTING MAIN

NOTES:

1. WATER AND RECYCLED WATER MAINS AND SEWER LATERALS 4" DIAMETER AND SMALLER SHALL HAVE A SHORT SECTION OF PIPE REMOVED AND PIPE ENDS ENCASED IN CONCRETE.
2. EXISTING MAIN TO BE PLUGGED WITH CONCRETE OR PRESSURE GROUTED AT INTERVALS OF ABOUT 200' OR AS DIRECTED BY THE ENGINEER.
3. EXISTING MAINS 12" AND LARGER REQUIRE THE ENTIRE LENGTH OF THE PIPE TO BE FILLED BY PRESSURE GROUTING OR BY BLOWN SAND.
4. EXISTING VALVES SHALL BE TURNED TO THE CLOSED POSITION. REMOVE GATE WELL AND REPLACE WITH COMPACTED BACKFILL.
5. FOR ABANDONMENT OF MANHOLES SEE SD–6.
6. PRIOR AGENCY APPROVAL REQUIRED FOR CUTTING AND PLUGGING.

CITY OF SOUTH GATE INCORPORATED JAN 20, 1923	CITY OF SOUTH GATE DEPARTMENT OF PUBLIC WORKS	CUTTING AND PLUGGING ABANDONED WATER, RECYCLED WATER, AND SEWER MAINS		
	APPROVED DIRECTOR OF PUBLIC WORKS	8/26/21 DATE	REVISION	STD. NO. WD-45 SHEET 1 OF 1

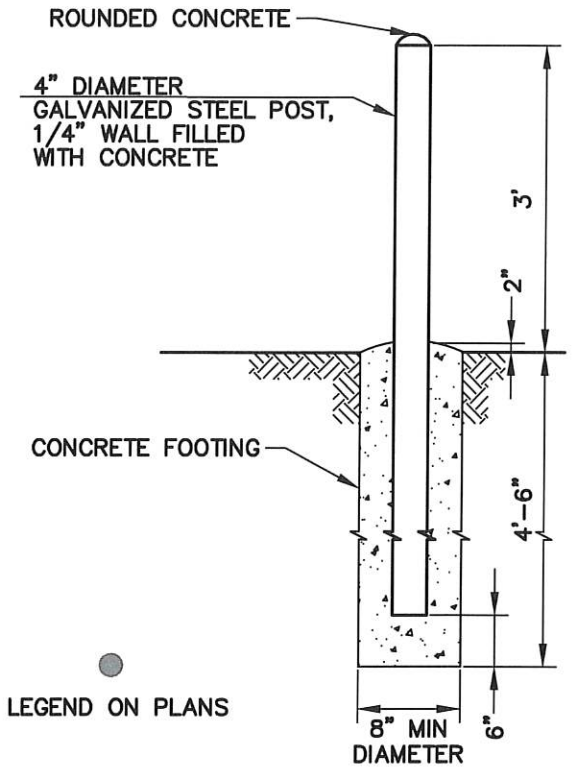

LEGEND ON PLANS

PROTECTION POST
TYPE "A"

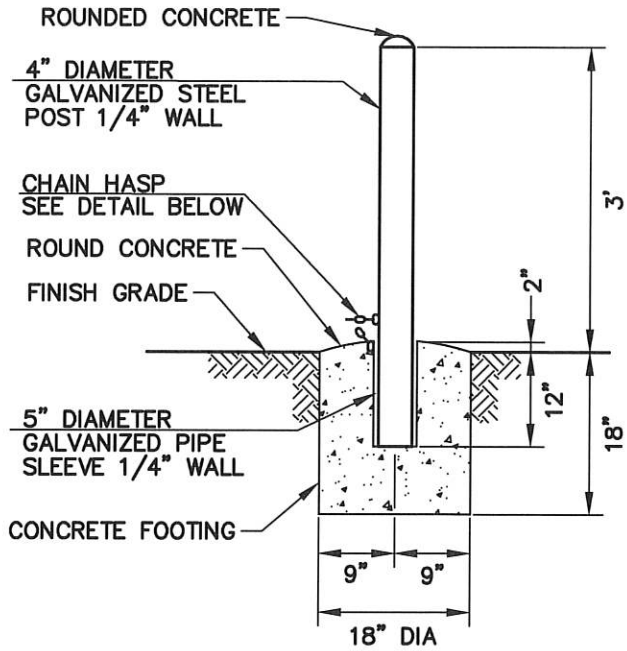

DEMOUNTABLE PROTECTION POST
TYPE "B"

◎
LEGEND ON PLANS

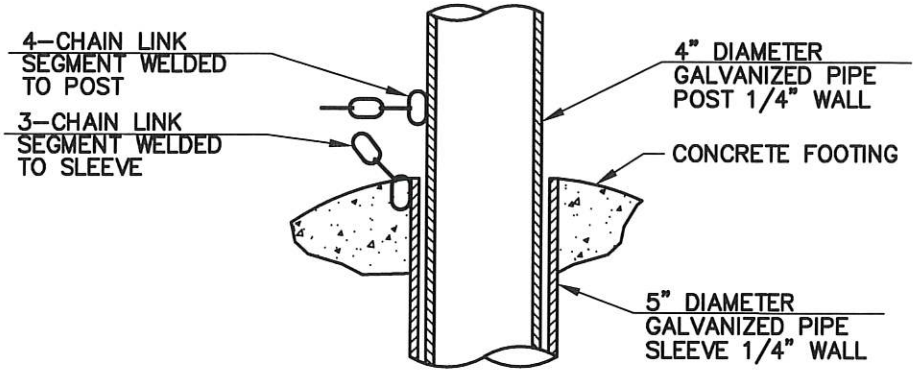

CHAIN HASP DETAIL

NOTES:

1. TYPE "A" AND TYPE "B" PROTECTION POSTS SHALL BE INSTALLED WHERE INDICATED ON THE APPROVED PLANS OR AS DIRECTED BY THE ENGINEER. CITY OF SOUTH GATE REQUIREMENTS DICTATE IN AREAS OF CITY EQUIPMENT.
2. CHAIN TO BE 1/4" PROOF COIL CHAIN GALVANIZED STEEL. WELD 4-LINK SEGMENT TO POST AND 3-LINK SEGMENT TO SLEEVE.
3. TYPE "A" AND TYPE "B" PROTECTION POSTS SHALL BE COATED USING SAFETY YELLOW IN ACCORDANCE WITH CITY'S STANDARDS.
4. PAINT COLOR SHALL BE APPROVED BY ENGINEER.

CITY OF SOUTH GATE DEPARTMENT OF PUBLIC WORKS	**PROTECTION POST INSTALLATION**		
APPROVED DIRECTOR OF PUBLIC WORKS	8/26/21 DATE	REVISION	STD. NO. **WD-46** SHEET 1 OF 1

SEWER SYSTEM

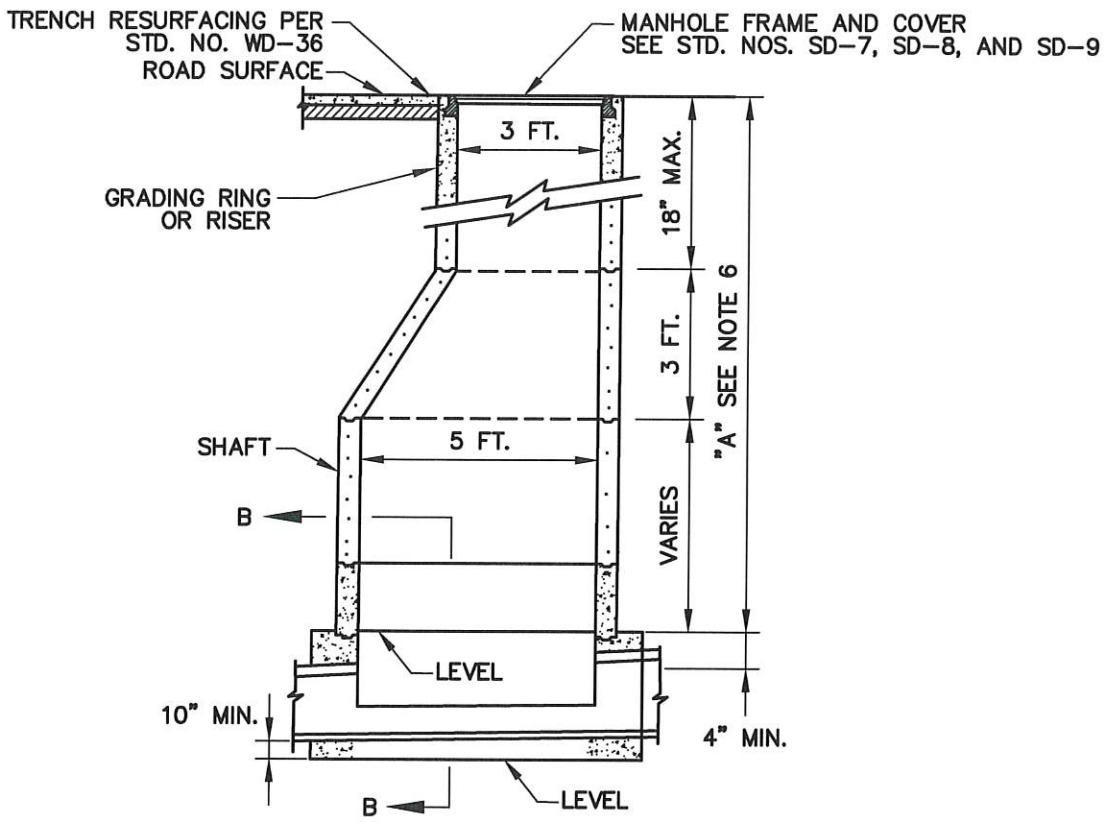

SECTION A-A

LEGEND ON PLANS

NOTES:

1. MANHOLE FRAME AND ALL JOINTS SHALL BE SET IN CLASS "C" MORTAR.
2. ALL PRECAST COMPONENTS SHALL BE MANUFACTURED IN ACCORDANCE WITH ASTM C478.
3. VERTICAL WALL OF CONE SHALL BE ON THE UPSTREAM SIDE OF THE MANHOLE.
4. CONCRETE BASE SHALL BE 560-C-3250.
5. PRECAST SECTIONS SHALL BE USED WITHIN DIMENSION "A" AS REQUIRED, IN ORDER OF PREFERENCE LISTED:
   A) CONE (NOTCHED FOR PIPE IF DIMENSION "A" IS LESS THAN 3').
   B) 6" TO 18" OF 3' DIAMETER GRADE RINGS AND/OR RISERS.
   C) 5' DIAMETER SHAFT VARIABLE HEIGHT.
6. FLEXIBLE PIPE JOINTS SHALL BE REQUIRED WITHIN 12" OF OUTSIDE FACE OF MANHOLE.
7. ALL PATCHING WITHIN MANHOLE BASE SHALL BE EPOXY MORTAR.
8. PRECAST BASE SHALL BE APPROVED BY THE ENGINEER.
9. MANHOLE LINING SHALL BE PER STD. NO. SD-5.
10. USE PREFORMED COLD-APPLIED READY-TO-USE PLASTIC JOINING SEALANT COMPOUNDS FOR ALL MANHOLE JOINTS. REMOVE EXCESS FROM SURFACES INSIDE THE MANHOLE PRIOR TO APPLYING MANHOLE LINING.

CITY OF SOUTH GATE INCORPORATED JAN 20, 1923	CITY OF SOUTH GATE DEPARTMENT OF PUBLIC WORKS	STANDARD MANHOLE	
	APPROVED DIRECTOR OF PUBLIC WORKS	8/26/21 DATE	REVISION
			STD. NO. SD-1 SHEET 1 OF 2

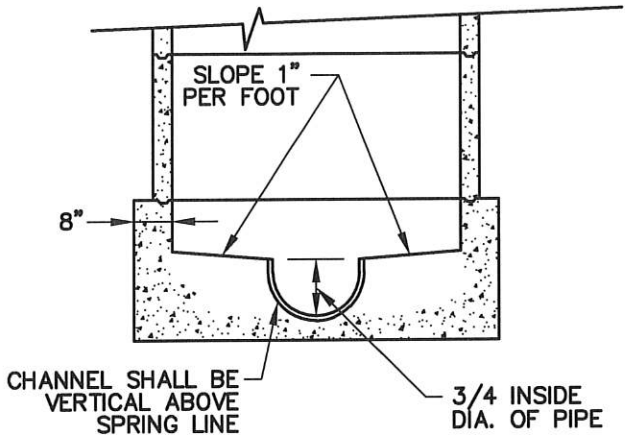

SECTION B–B

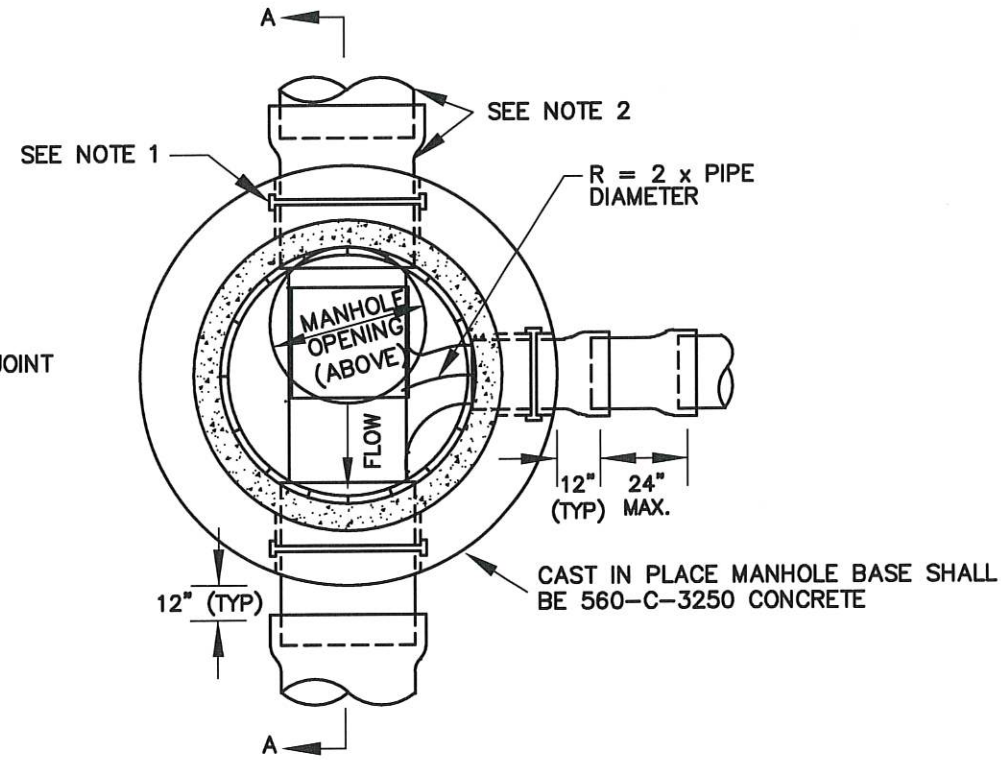

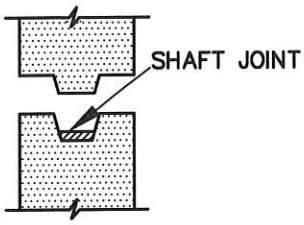

SHAFT JOINT

MANHOLE BASE WITH PIPE CONNECTION

NOTES:

1. FOR PVC SEWER PIPE, USE CONCRETE MANHOLE ADAPTER. FOR VCP SEWER PIPE, USE WATER TIGHT FLEXIBLE MANHOLE CONNECTOR.
2. USE SAME MATERIAL AS IN SEWER MAIN (TYP.).

CITY OF SOUTH GATE INCORPORATED JAN 20, 1923	CITY OF SOUTH GATE DEPARTMENT OF PUBLIC WORKS	STANDARD MANHOLE		
	APPROVED DIRECTOR OF PUBLIC WORKS	8/26/21 DATE	REVISION	STD. NO. SD-1 SHEET 2 OF 2

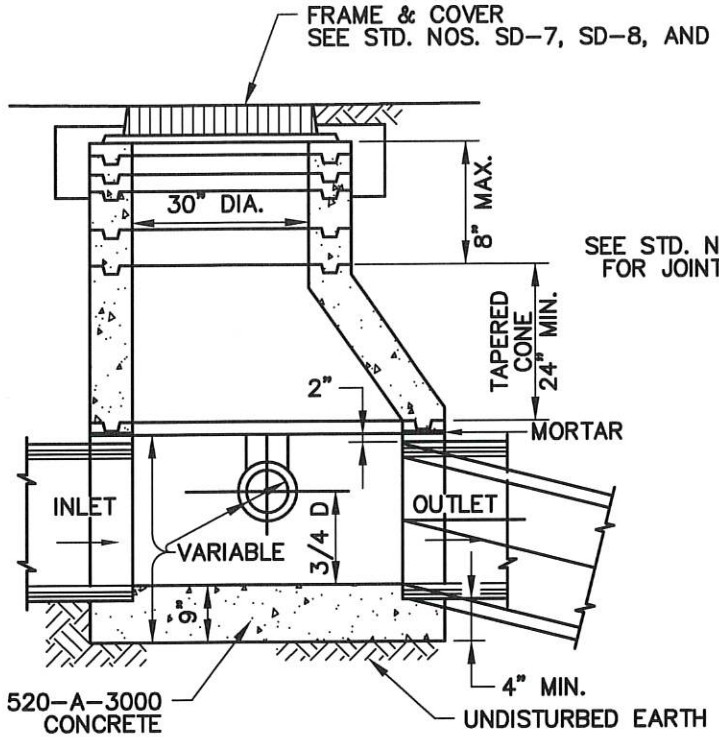

SECTION B-B

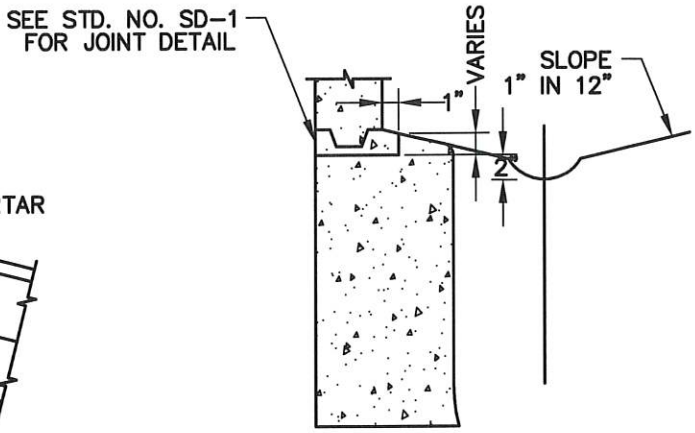

SECTION A-A

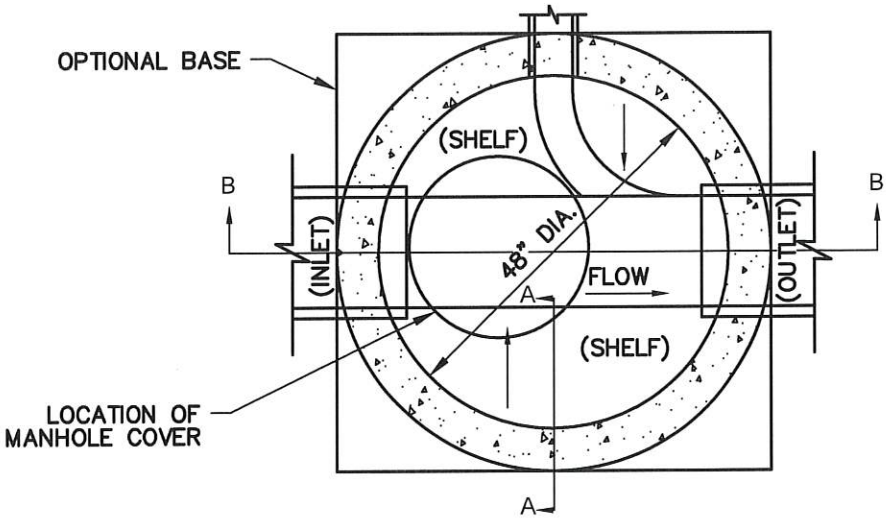

PLAN

NOTES:

1. EXCEPT AS INDICATED HEREON OR ON THE PROJECT PLANS, MANHOLES SHALL CONFORM TO STD. NO. SD-1 PRECAST CONCRETE MANHOLE.

2. IN UNPAVED TRAFFIC AREAS FORM A CONCRETE COLLAR 10" WIDE AND 10" DEEP AROUND MANHOLE FRAME.

CITY OF SOUTH GATE INCORPORATED JAN 20, 1923	CITY OF SOUTH GATE DEPARTMENT OF PUBLIC WORKS	SHALLOW MANHOLE	
	APPROVED DIRECTOR OF PUBLIC WORKS	8/26/21 DATE	REVISION
			STD. NO. SD-2 SHEET 1 OF 1

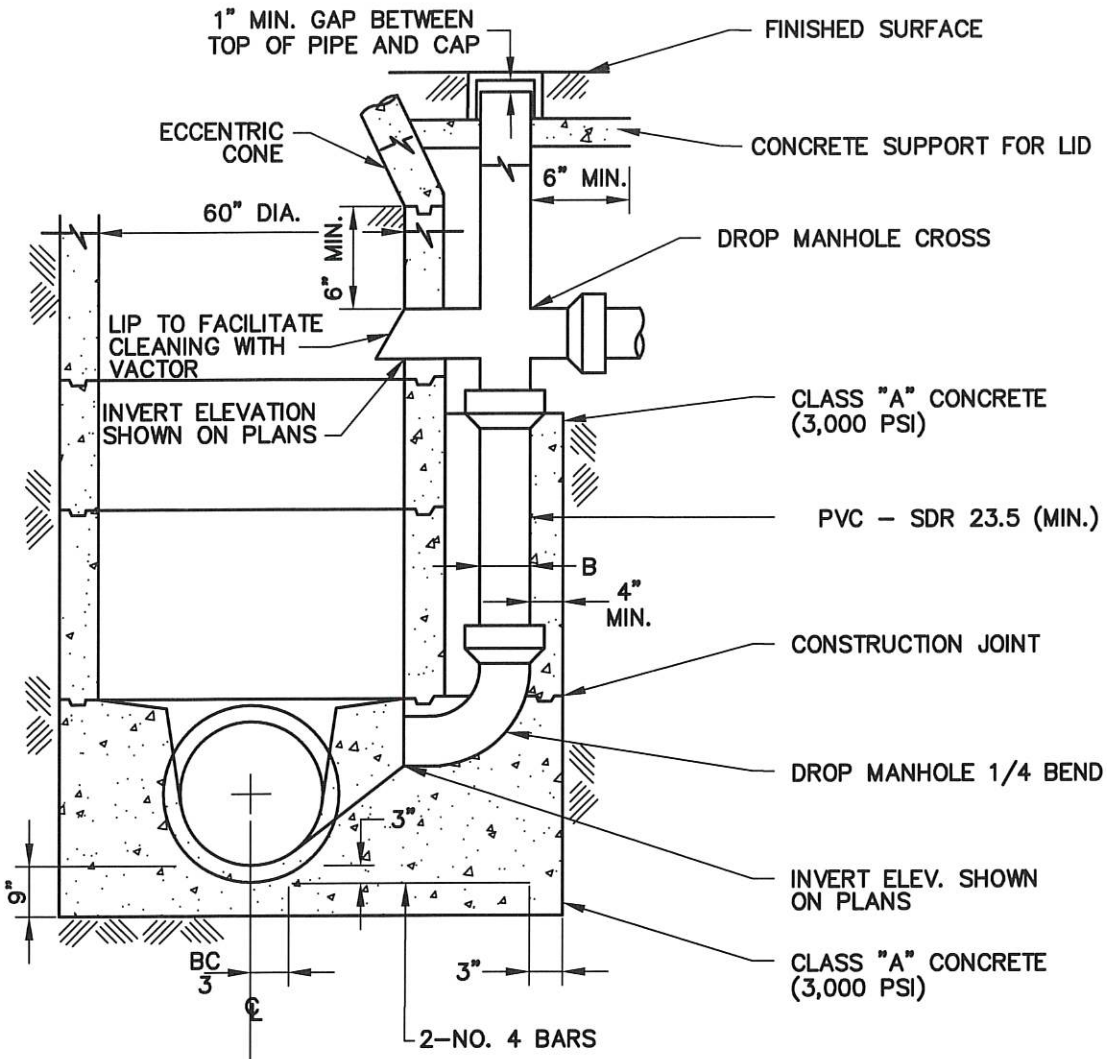

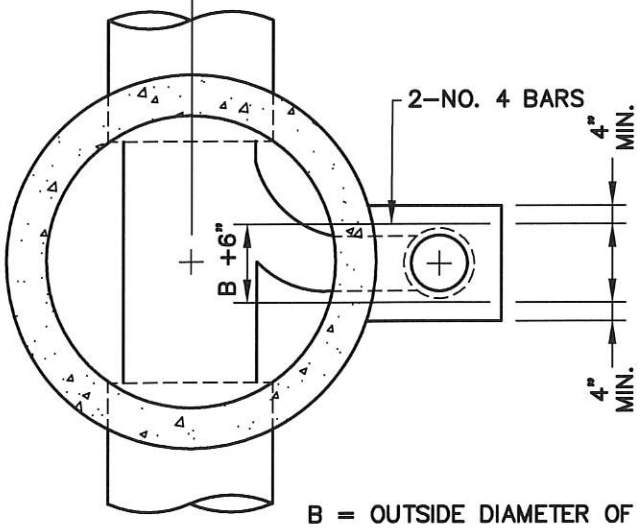

B = OUTSIDE DIAMETER OF PIPE

NOTES:

1. FOUNDATION FOR DROP SECTION SHALL BE POURED MONOLITHICALLY WITH MANHOLE BASE.
2. ALL APPLICABLE PROVISIONS OF STD. NO. SD–1 STANDARD MANHOLE SHALL APPLY TO DROP MANHOLE.
3. THIS CONFIGURATION IS ALLOWED ONLY FOR A NEW SEWER CONNECTION TO AN EXISTING MANHOLE, SO THAT THE SLOPE OF THE NEW SEWER PIPE DOES NOT EXCEED 5%.
4. EXISTING MANHOLE MUST BE COMPLETELY LINED OR COATED.
5. WEIGHT OF CLEAN–OUT LID MUST NOT BE SUPPORTED BY THE PIPE.

CITY OF SOUTH GATE DEPARTMENT OF PUBLIC WORKS	DROP MANHOLE		
APPROVED DIRECTOR OF PUBLIC WORKS	8/26/21 DATE	REVISION	STD. NO. SD-3 SHEET 1 OF 1

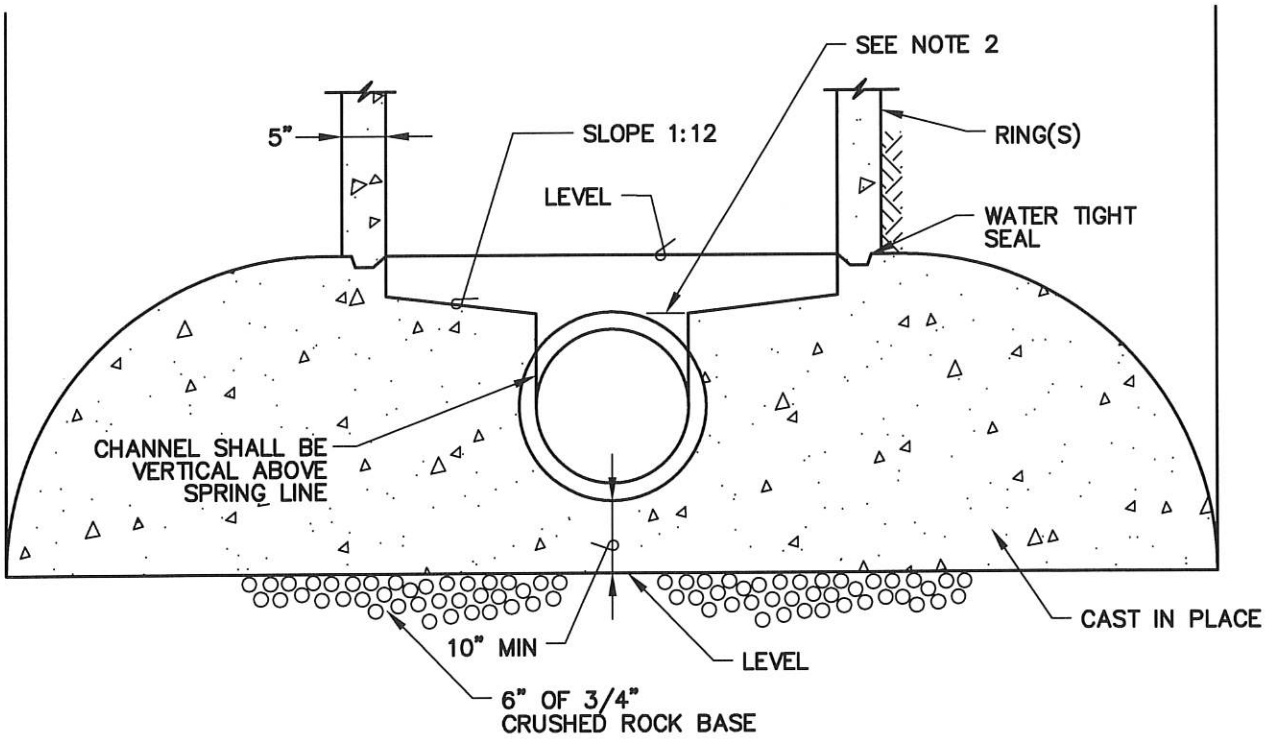

NOTES:

1. MANHOLE BASE SHALL BE COATED PER STD. NO. SD-5.
2. LOWEST POINT ON SHELF SHALL BE EVEN WITH TOP OF PIPE.
3. CAST IN PLACE MANHOLE BASES CAST WITH 560-C-3250 SHALL BE CURED A MINIMUM OF THREE DAYS PRIOR TO STACKING MANHOLE. BASES CAST WITH 660-CW-4000 (WITHOUT CALCIUM CHLORIDE (CC)) OR WITH 560-C-3250 TREATED WITH A MINIMUM OF 2% CC SOLUTION IN ACCORDANCE WITH 201-1 SHALL BE CURED A MINIMUM OF 24 HOURS. THESE CURING REQUIREMENTS APPLY TO MANHOLES WITH A MAXIMUM HEIGHT OF 25'. SHORTER CURING TIMES, DEEPER INSTALLATIONS, AND ALTERNATE CONCRETE MIX DESIGNS REQUIRE ENGINEER'S PRIOR APPROVAL.
4. CONCRETE SPECIFIED BY ALTERNATE CLASS OR OTHERWISE CONTAINING FLY ASH IS NOT ALLOWED FOR USE IN CAST IN PLACE MANHOLES.
5. CONCRETE MIX DESIGNS CONTAINING ACCELERATING ADMIXTURES OTHER THAN CC REQUIRE A BREAK HISTORY AND ENGINEER'S APPROVAL.

CITY OF SOUTH GATE DEPARTMENT OF PUBLIC WORKS	SEWER MANHOLE BASE		
APPROVED DIRECTOR OF PUBLIC WORKS	8/26/21 DATE	REVISION	STD. NO. SD-4 SHEET 1 OF 1

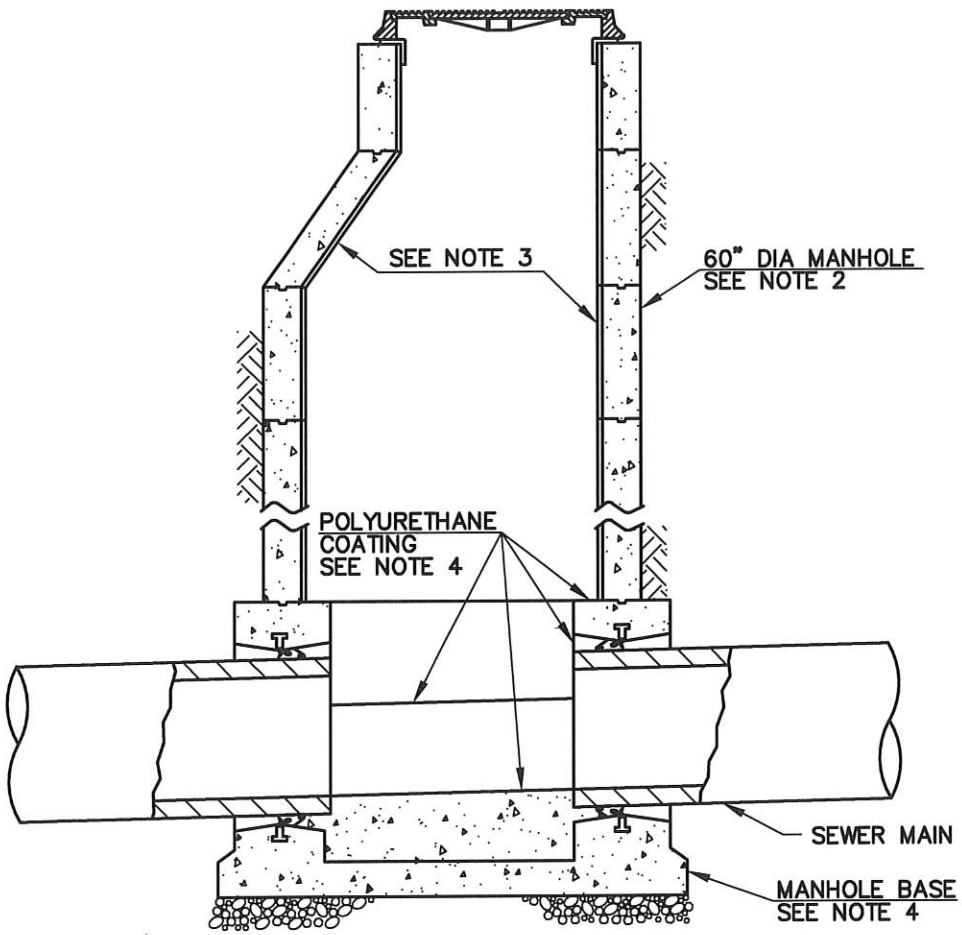

NOTES:

1. REFER TO SPECIFICATIONS WHERE APPLICABLE.
2. MANHOLES FOR SEWER MAINS SHALL BE COATED AND LINED.
3. MANHOLE SHAFT AND CONE SECTIONS, AND GRADE RINGS SHALL BE PVC LINED OR EPOXY/POLYURETHANE COATED. INTERIOR COATING AND LINING TYPES SHALL BE APPROVED BY THE ENGINEER. APPLY NON-SKID COATING ON TOTAL SHELF AREA.
4. ELASTOMERIC POLYURETHANE COATING SHALL BE APPLIED TO THE INTERIOR OF MANHOLE BASES.
5. MATERIALS SHALL BE SELECTED FROM THE CITY'S APPROVED MATERIALS LIST.

CITY OF SOUTH GATE INCORPORATED JAN 20, 1923	CITY OF SOUTH GATE DEPARTMENT OF PUBLIC WORKS	MANHOLE COATING AND LINING	
	APPROVED DIRECTOR OF PUBLIC WORKS	8/26/21 DATE	REVISION
			STD. NO. SD-5 SHEET 1 OF 1

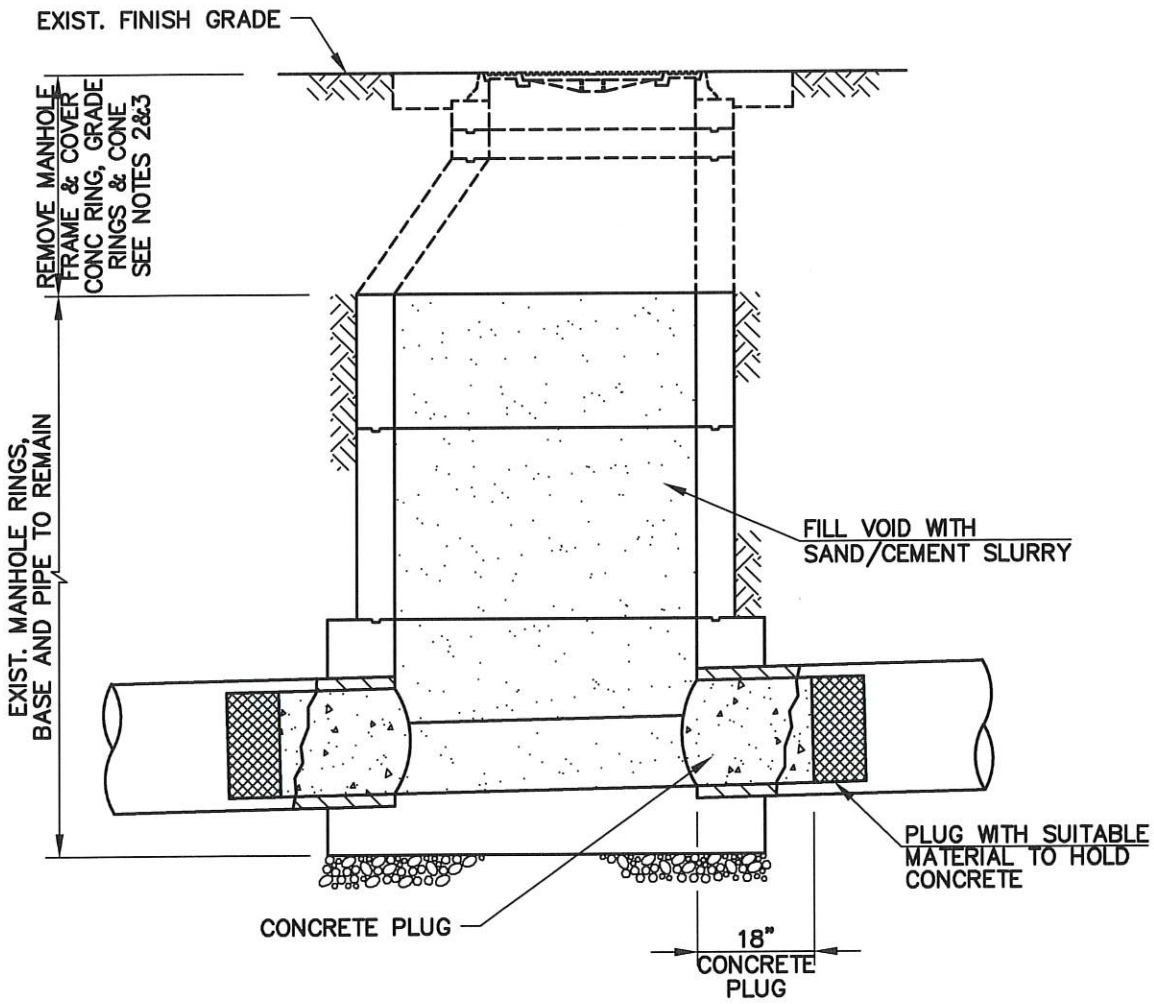

NOTES:

1. REFER TO SPECIFICATIONS WHERE APPLICABLE.
2. ALL SALVAGED MATERIAL BECOMES PROPERTY OF CITY OF SOUTH GATE.
3. BACKFILL PER CITY'S REQUIREMENT.
4. FOR CUTTING & PLUGGING ABANDONED SEWER MAINS, SEE STD. NO. WD-45.

LEGEND ON PLANS

CITY OF SOUTH GATE INCORPORATED JAN 20, 1923	CITY OF SOUTH GATE DEPARTMENT OF PUBLIC WORKS	EXISTING MANHOLE ABANDONMENT	
	APPROVED DIRECTOR OF PUBLIC WORKS — DATE 8/26/21	REVISION	STD. NO. SD-6 SHEET 1 OF 1

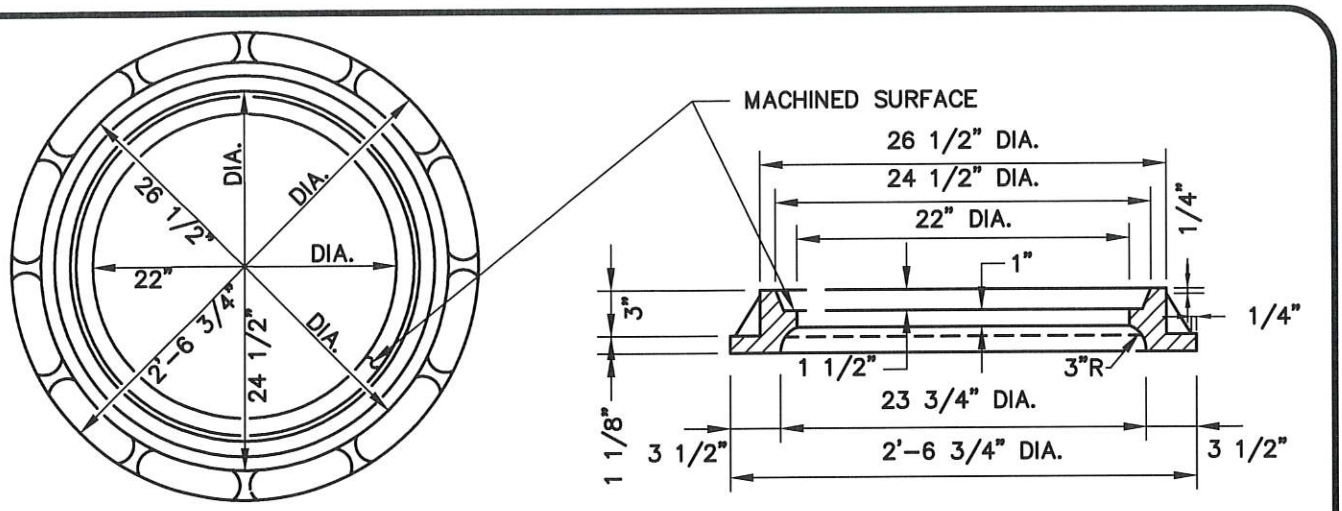

MANHOLE COVER FRAME

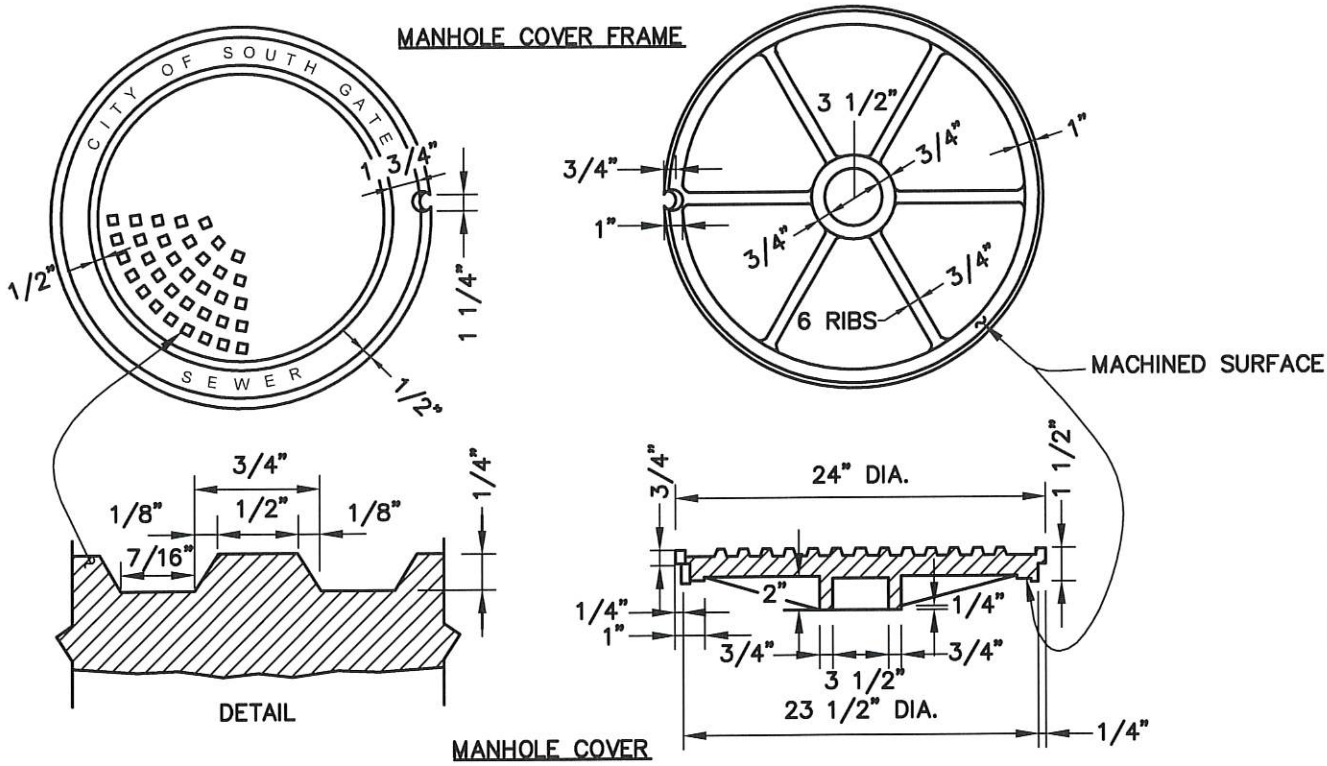

MANHOLE COVER

NOTES:

1. FRAME AND COVER SHALL BE CAST IRON. CAST IRON SHALL CONFORM TO ASTM 48, CLASS 35B.
2. WEIGHTS: FRAME 166 LBS – 193 LBS.
   COVER 147 LBS – 171 LBS.
3. MACHINE ALL MATCHING SURFACES AND SEATS OF FRAME AND COVER TO PREVENT ROCKING.
4. IMPORTED FRAMES AND COVERS SHALL HAVE THE COUNTRY OF ORIGIN MARKED IN COMPLIANCE WITH FEDERAL REGULATIONS.

FOR	MARK
SEWER PROJECTS	SEWER
STORM DRAIN PROJECTS	STORM DRAIN
WATER PROJECTS	WATER

CITY OF SOUTH GATE
INCORPORATED JAN 20, 1923

CITY OF SOUTH GATE
DEPARTMENT OF PUBLIC WORKS

24" MANHOLE FRAME AND COVER HEAVY DUTY

APPROVED

DIRECTOR OF PUBLIC WORKS

8/26/21
DATE

REVISION

STD. NO.
SD-7

SHEET 1 OF 1

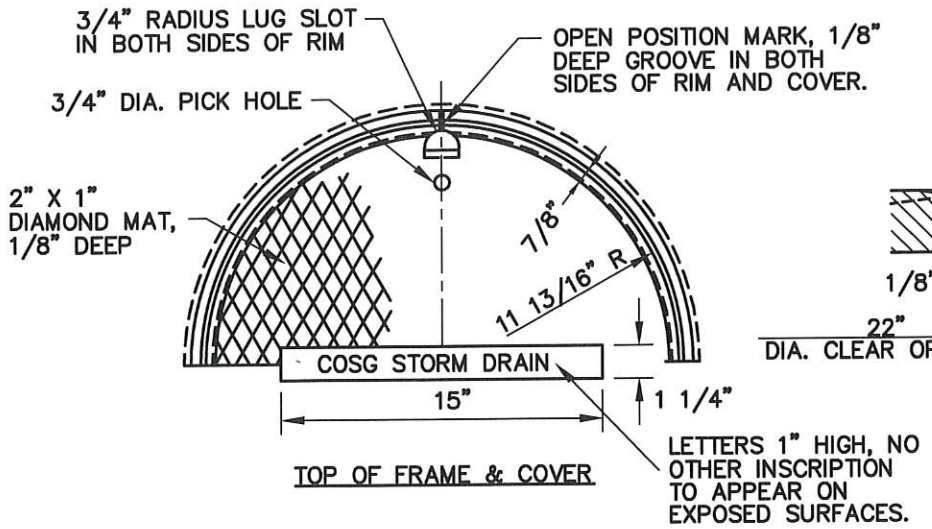

TOP OF FRAME & COVER

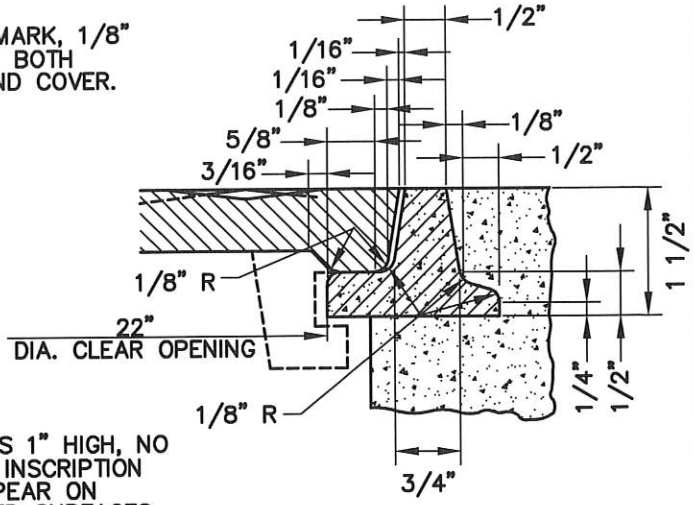

SECTION THROUGH RIM

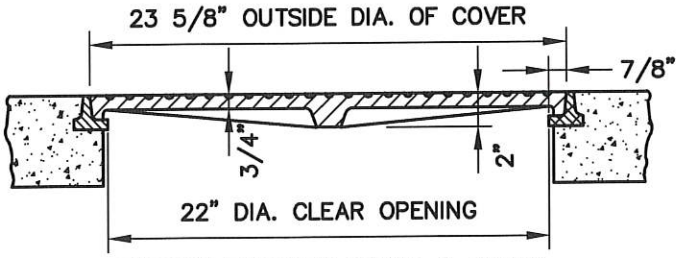

SECTION THROUGH FRAME & COVER

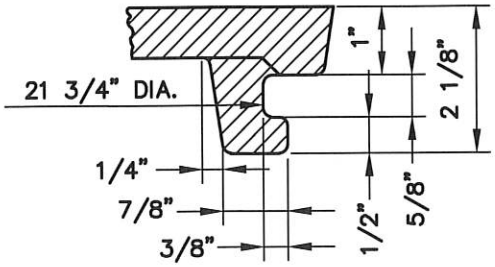

SECTION THROUGH LUG

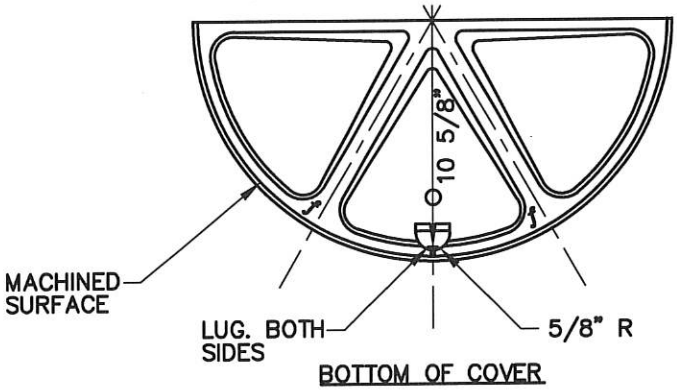

BOTTOM OF COVER

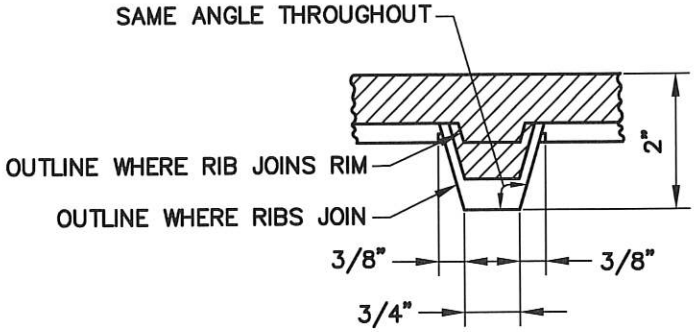

SECTION THROUGH RIB AT MID RADIUS

NOTES:

1. FRAME AND COVER SHALL BE CAST IRON. CAST IRON SHALL CONFORM TO ASTM 48, CLASS 30.
2. FRAME AND COVER FOR USE IN NON-TRAFFIC AREA ONLY.
3. WEIGHTS: FRAME 29 LBS – 33 LBS.
   COVER 95 LBS – 110 LBS.
4. IMPORTED FRAMES AND COVERS SHALL HAVE THE COUNTRY OF ORIGIN MARKED IN COMPLIANCE WITH FEDERAL REGULATIONS.

FOR	MARK
SEWER PROJECTS	SEWER
STORM DRAIN PROJECTS	STORM DRAIN
WATER PROJECTS	WATER

CITY OF SOUTH GATE
INCORPORATED JAN 20, 1923

CITY OF SOUTH GATE
DEPARTMENT OF PUBLIC WORKS

24" MANHOLE FRAME AND COVER LIGHT DUTY

APPROVED

DIRECTOR OF PUBLIC WORKS

8/26/21
DATE

REVISION

STD. NO.
SD-8

SHEET 1 OF 1

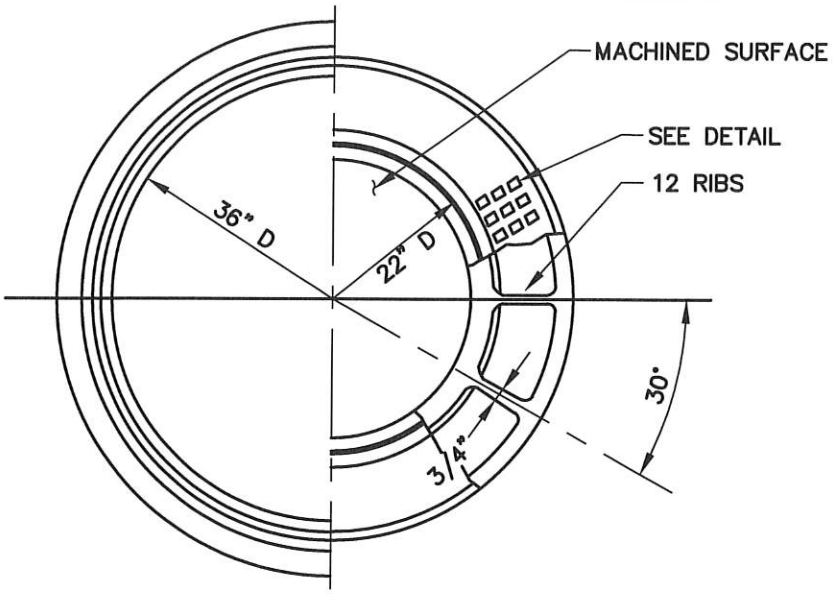

HALF PLAN FRAME & COVER

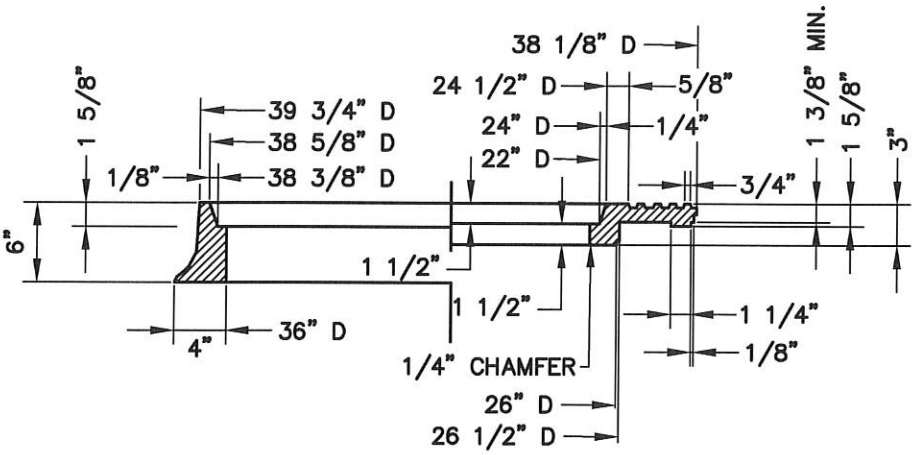

HALF SECTION FRAME & COVER

NOTES:

1. FRAME AND COVER SHALL BE CAST IRON. CAST IRON SHALL CONFORM TO ASTM 48, CLASS 35B.
2. WEIGHTS: FRAME 314 LBS – 363 LBS.
   OUTER COVER 285 LBS – 330 LBS.
   INNER COVER 147 LBS – 171 LBS.
3. MACHINE ALL MATCHING SURFACES AND SEATS OF FRAME AND COVER TO PREVENT ROCKING.
4. IMPORTED FRAMES AND COVERS SHALL HAVE THE COUNTRY OF ORIGIN MARKED IN COMPLIANCE WITH FEDERAL REGULATIONS.

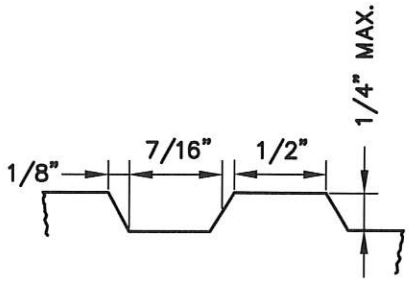

DETAIL

CITY OF SOUTH GATE DEPARTMENT OF PUBLIC WORKS	36" MANHOLE FRAME AND TWO CONCENTRIC COVERS HEAVY DUTY		
APPROVED DIRECTOR OF PUBLIC WORKS	8/26/21 DATE	REVISION	STD. NO. SD-9 SHEET 1 OF 1

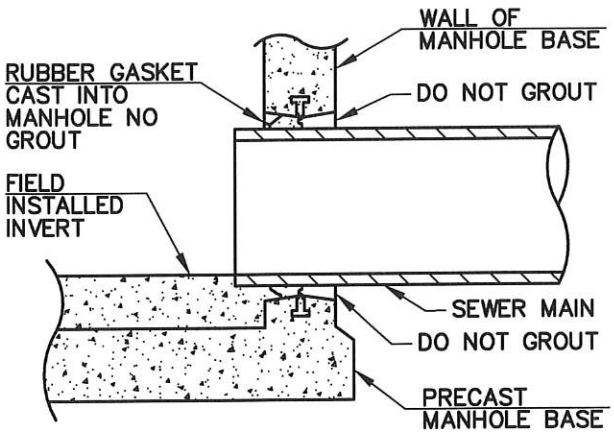

PRECAST MANHOLE BASE TYPE 'A'

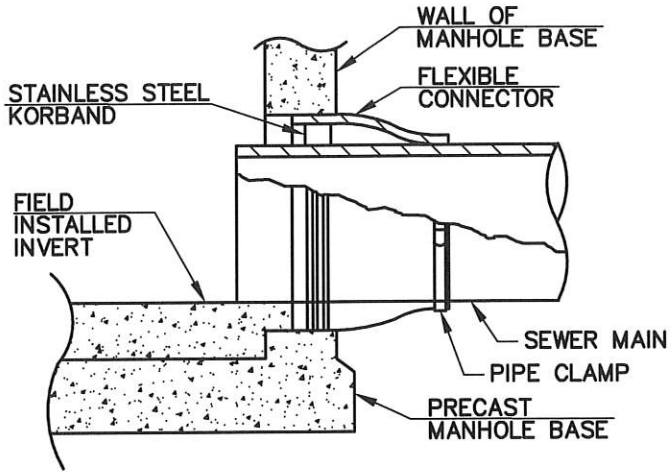

PRECAST MANHOLE BASE TYPE 'B'

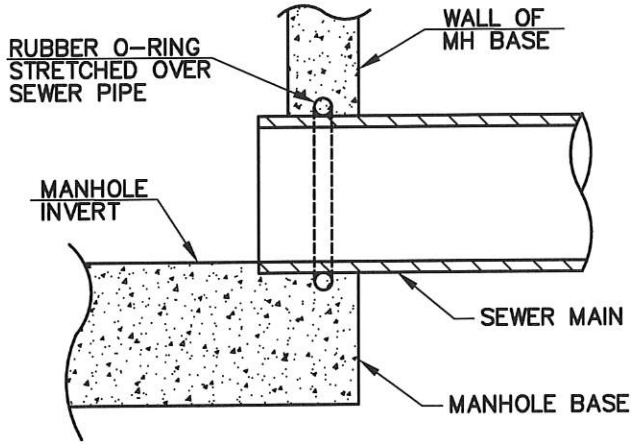

CAST IN PLACE MANHOLE BASE

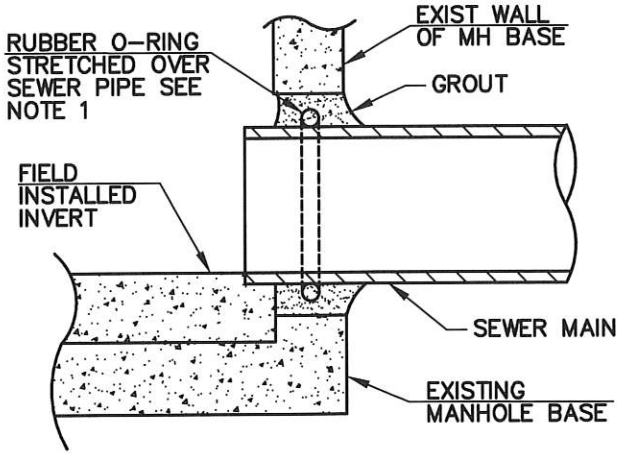

BREAKING INTO EXIST MANHOLE BASE

NOTES:

1. A RUBBER O-RING OR A FLEXIBLE CONNECTOR (AS SHOWN IN PRECAST MANHOLE BASE TYPE 'B') SHALL BE USED WHEN BREAKING INTO EXISTING MANHOLE.
2. FOR MANHOLE COATING AND LINING, SEE STD. NO. SD-5.

CITY OF SOUTH GATE DEPARTMENT OF PUBLIC WORKS	**MANHOLE PIPE CONNECTORS**		
APPROVED DIRECTOR OF PUBLIC WORKS	8/26/21 DATE	REVISION	STD. NO. **SD-10** SHEET 1 OF 1

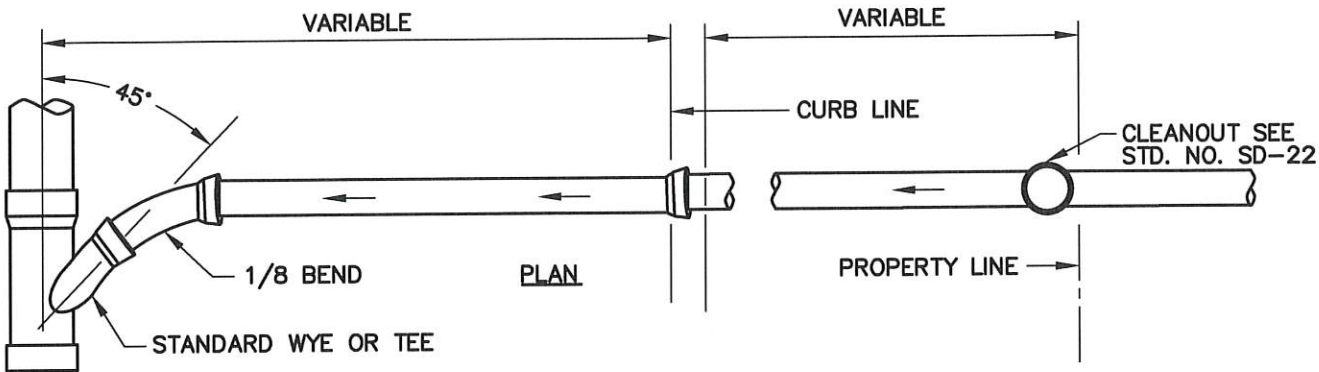

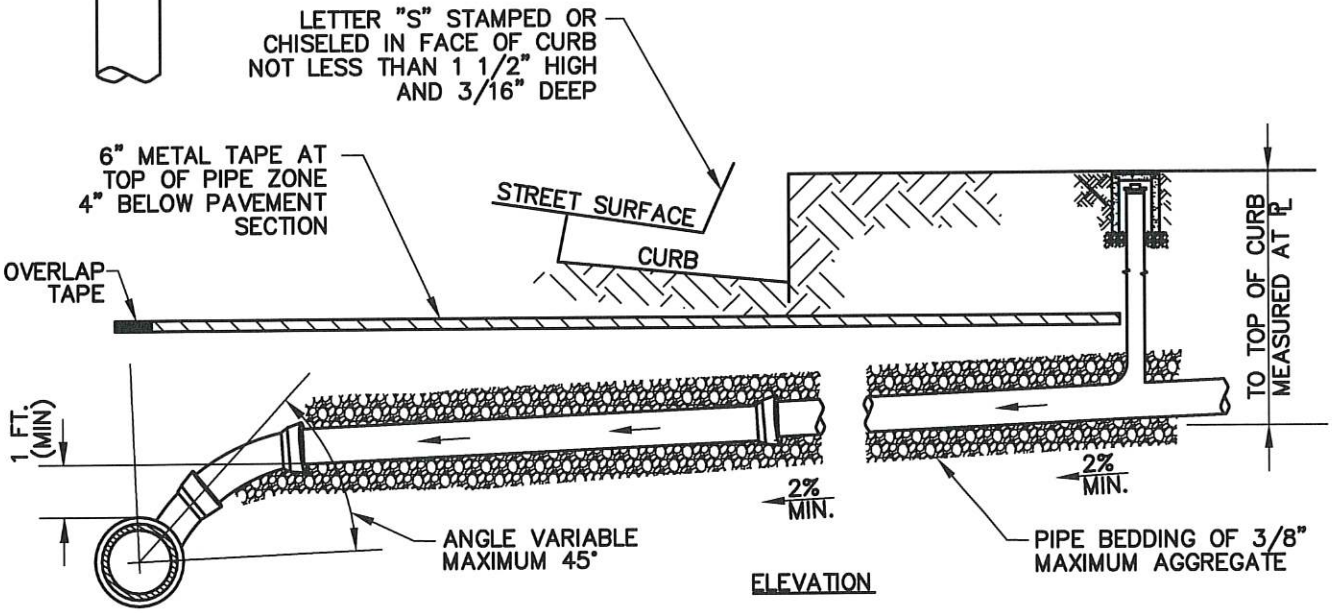

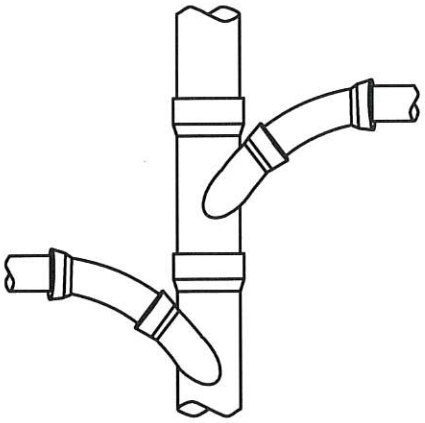

DETAIL SHOWING THE MANNER OF CONNECTING OPPOSITE LATERALS TO A SEWER MAIN. TWO CONNECTIONS SHALL NOT BE MADE IN THE SAME LENGTH OF PIPE.

NOTES:

1. IN NO CASE SHALL A LATERAL CONNECT TO THE SEWER MAIN DIRECTLY ON TOP OF THE PIPE.
2. ALL JOINTS ON SEWER LATERAL PIPE SHALL BE VCP COMPRESSION TYPE.
3. LATERAL SHALL EXTEND TO PROPERTY LINE UNLESS SHOWN OTHERWISE ON PLANS.
4. DO NOT TAP HOLE AND INSERT LATERAL PIPE DIRECTLY INTO MAIN. ALL CONNECTIONS SHALL BE MADE USING A SADDLE OR WYE CUT IN.
5. SEWER LATERAL SHALL HAVE 6" METAL TAPE WITH GREEN LETTERING INDICATING "SEWER" INSTALLED ABOVE THE ALIGNMENT OF THE NON-METALLIC PIPE FROM SEWER MAIN TO PROPERTY LINE.

LEGEND ON PLANS

——②

CITY OF SOUTH GATE
INCORPORATED JAN 20, 1923

CITY OF SOUTH GATE
DEPARTMENT OF PUBLIC WORKS

HOUSE CONNECTION (SEWER LATERAL)

APPROVED

DIRECTOR OF PUBLIC WORKS

8/26/21
DATE

REVISION

STD. NO.
SD-11

SHEET 1 OF 1

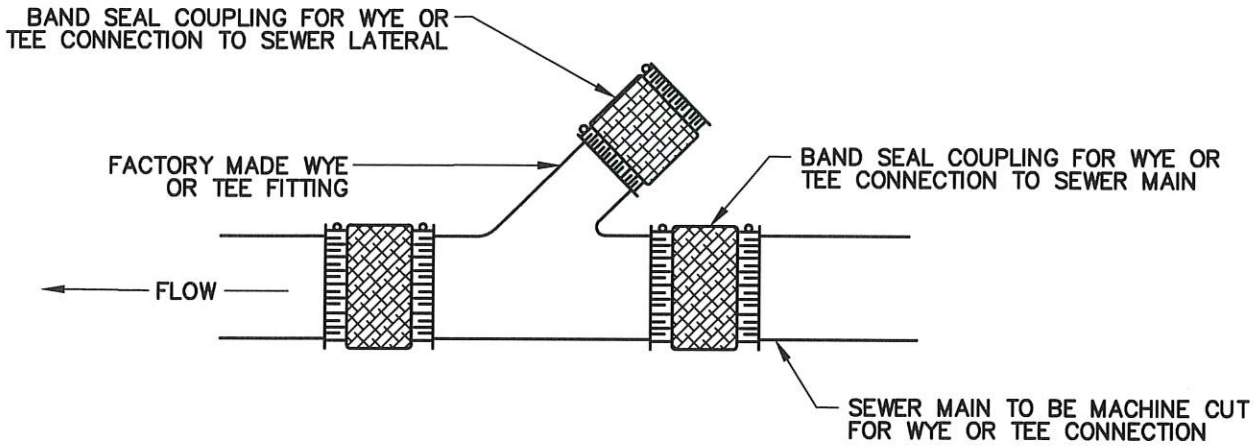

FACTORY MADE WYE OR TEE CONNECTION

NOTES:

1. IN NO CASE SHALL CONNECTION BE MADE DIRECTLY ON TOP OF SEWER MAIN.
2. NO MORE THAN ONE CUT–IN WYE WILL BE ALLOWED FOR EACH LENGTH OF EXISTING VCP SEWER MAIN.
3. FOR SEWER LATERAL INSTALLATION, SEE STD. NO. SD–11.
4. FOR TRENCH BACKFILL, SEE STD. NOS. SD–14, SD–15, AND SD–16.
5. MATERIALS SHALL BE SELECTED FROM THE APPROVED MATERIALS LIST.

CITY OF SOUTH GATE INCORPORATED JAN 20, 1923	CITY OF SOUTH GATE DEPARTMENT OF PUBLIC WORKS	CUT-IN WYE CONNECTION		
	APPROVED DIRECTOR OF PUBLIC WORKS	8/26/21 DATE	REVISION	STD. NO. SD-12 SHEET 1 OF 1

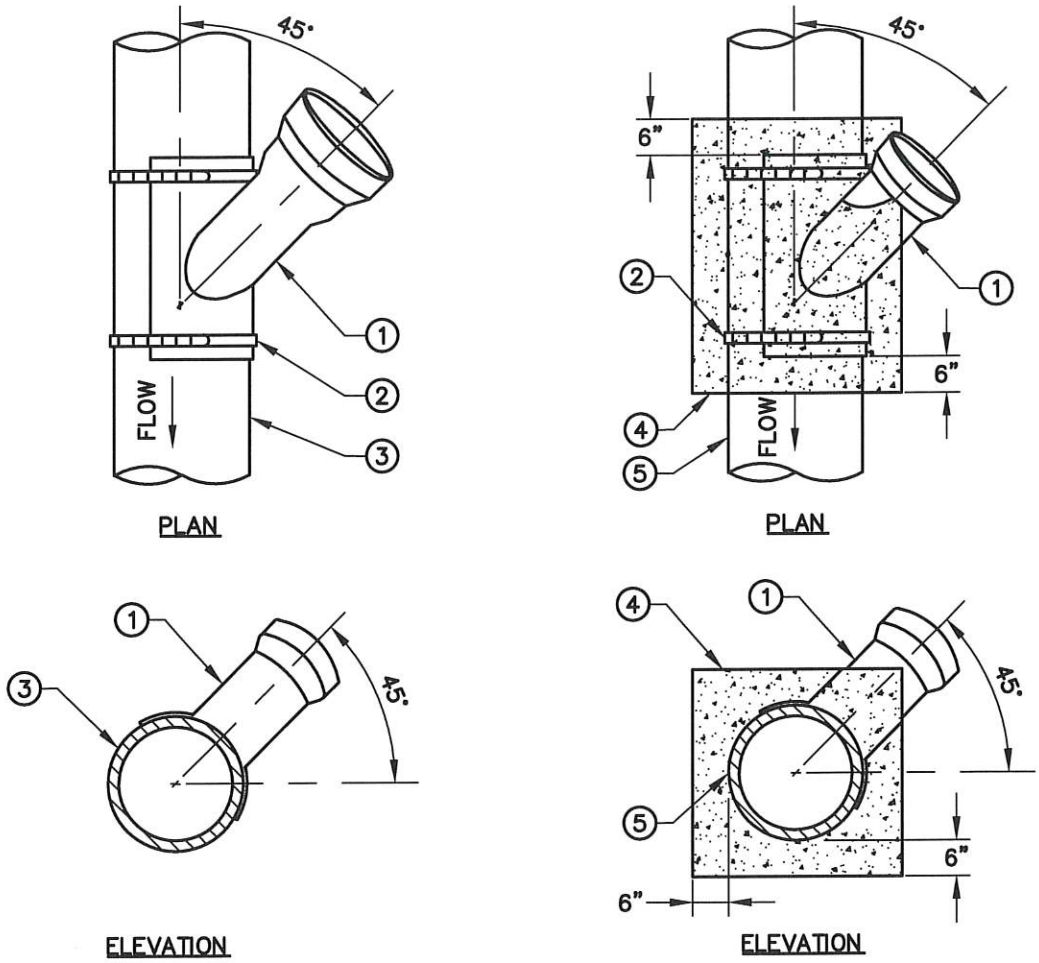

CUT-IN WYE CONNECTION
FOR EXISTING PVC PIPE
TYPE A

CUT-IN WYE CONNECTION
FOR EXISTING VCP PIPE
TYPE B

NOTES:

1. IN NO CASE SHALL CONNECTION BE MADE DIRECTLY ON TOP OF SEWER MAIN.
2. NO MORE THAN ONE CUT-IN WYE WILL BE ALLOWED FOR EACH LENGTH OF EXISTING VCP SEWER MAIN.
3. FOR SEWER LATERAL INSTALLATION, SEE STD. NO. SD-11.
4. FOR TRENCH BACKFILL, SEE STD. NOS. SD-14, SD-15, AND SD-16.
5. MATERIALS SHALL BE SELECTED FROM THE APPROVED MATERIALS LIST.

ITEM	SIZE AND DESCRIPTION	ITEM	SIZE AND DESCRIPTION
1	45° SADDLE WYE WITH GASKET	4	CONCRETE ENCASEMENT
2	STAINLESS STEEL HOSE CLAMPS (2-EACH)	5	EXISTING VCP SEWER MAIN
3	EXISTING PVC SEWER MAIN		

CITY OF SOUTH GATE
INCORPORATED JAN 20, 1923

CITY OF SOUTH GATE
DEPARTMENT OF PUBLIC WORKS

SADDLE CONNECTION

APPROVED

DIRECTOR OF PUBLIC WORKS

8/26/21
DATE

REVISION

STD. NO.
SD-13

SHEET 1 OF 1

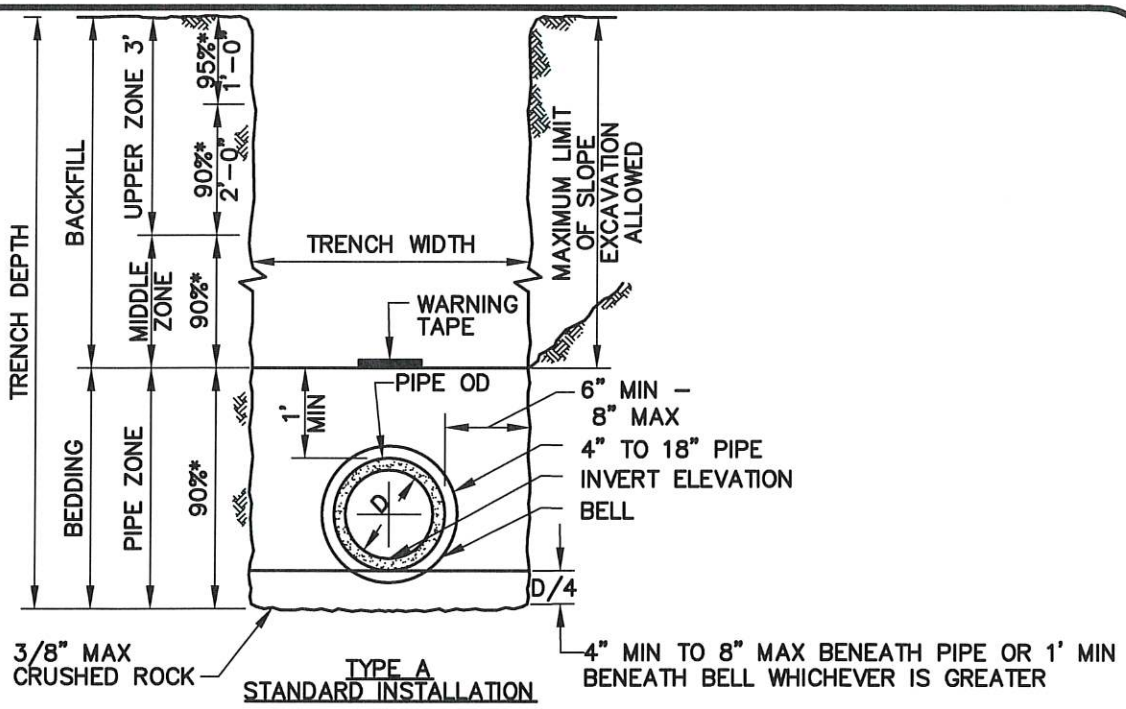

TYPE A
STANDARD INSTALLATION

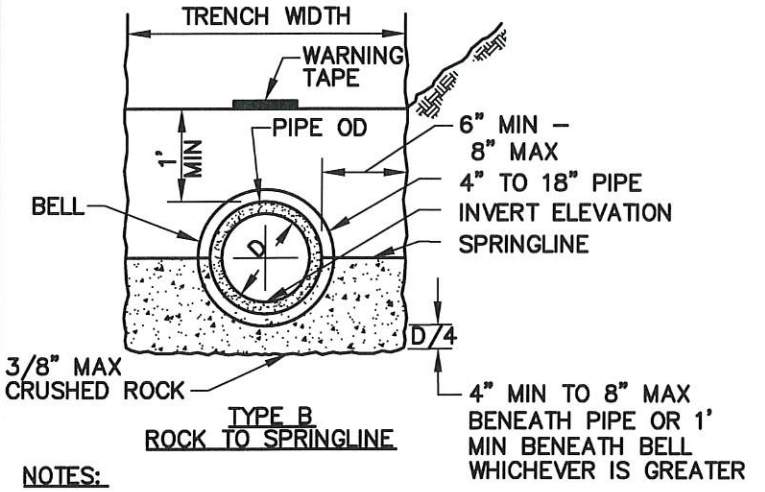

TYPE B
ROCK TO SPRINGLINE

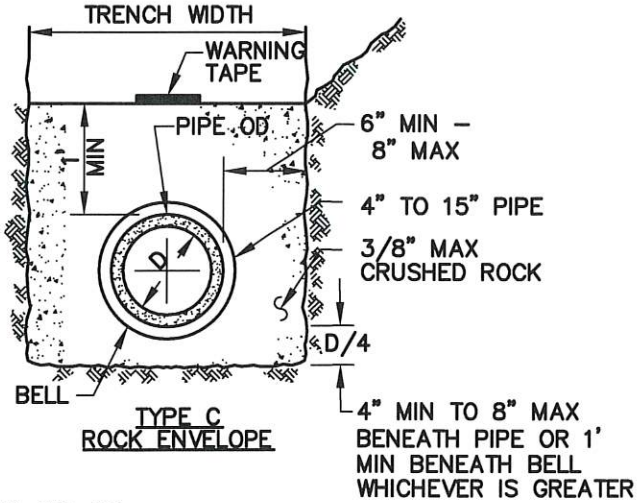

TYPE C
ROCK ENVELOPE

NOTES:

1. FOR TRENCH RESURFACING IN IMPROVED STREETS, SEE STD. NO. WD–36.
2. (*) INDICATES MINIMUM RELATIVE COMPACTION.
3. UNLESS INDICATED OTHERWISE IN DRAWINGS OR SPECIFICATIONS, MINIMUM DEPTH OF COVER FROM THE TOP OF PIPE TO FINISH GRADE FOR SEWER MAIN SHALL BE 5'. FOR SHALLOWER DEPTH, SPECIAL DESIGN IS REQUIRED.
4. SEE TYPE A INSTALLATION FOR DETAILS NOT SHOWN FOR TYPES B AND C.
5. FOR PIPE SIZE ENCASEMENT LARGER THAN 15", MAXIMUM SIDE WALL CLEARANCE SHALL BE 12" OR AS SHOWN ON THE PLANS.
6. 6" METAL WARNING TAPE SHALL BE INSTALLED ABOVE PIPE 4" BELOW TRENCH CAP AND 12" BELOW FINISH GRADE IN UNIMPROVED STREETS.
7. 1' SAND CUSHION OR A 6" MINIMUM SAND CUSHION WITH 1" NEOPRENE PAD SHALL BE PLACED FOR CROSSING UTILITIES WHEN VERTICAL CLEARANCE IS 1' OR LESS. THE NEOPRENE PAD SHALL BE PLACED ON THE MOST FRAGILE UTILITY.

CITY OF SOUTH GATE DEPARTMENT OF PUBLIC WORKS	**PIPE BEDDING AND TRENCH BACKFILL FOR SEWERS**		
APPROVED DIRECTOR OF PUBLIC WORKS	8/26/21 DATE	REVISION	STD. NO. **SD-14** SHEET 1 OF 1

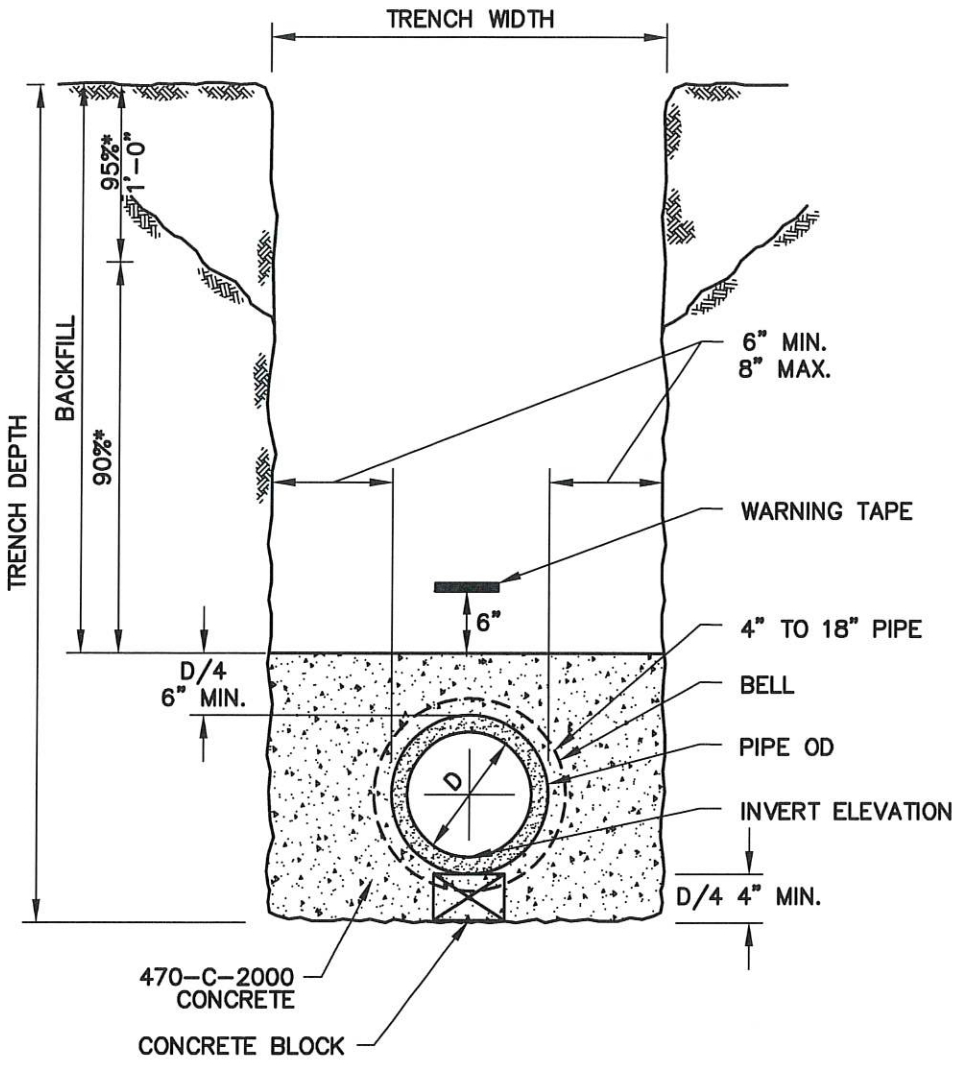

SECTION

NOTES:

1. ENCASE PIPE TO THE NEAREST FLEXIBLE JOINT OR AS REQUIRED BY THE ENGINEER.
2. FOR TRENCH RESURFACING IN IMPROVED STREETS, SEE STD. NO. WD-36.
3. CONCRETE ENCASEMENT SHALL BE USED FOR RIGID PIPE ONLY.
4. 6" METAL TAPE SHALL BE INSTALLED ABOVE PIPE, 4" BELOW PAVEMENT SECTION.
5. (*) INDICATES MINIMUM RELATIVE COMPACTION.

LEGEND ON PLANS

CITY OF SOUTH GATE INCORPORATED JAN 20, 1923	CITY OF SOUTH GATE DEPARTMENT OF PUBLIC WORKS	CONCRETE ENCASEMENT		
	APPROVED DIRECTOR OF PUBLIC WORKS	8/26/21 DATE	REVISION	STD. NO. SD-15 SHEET 1 OF 1

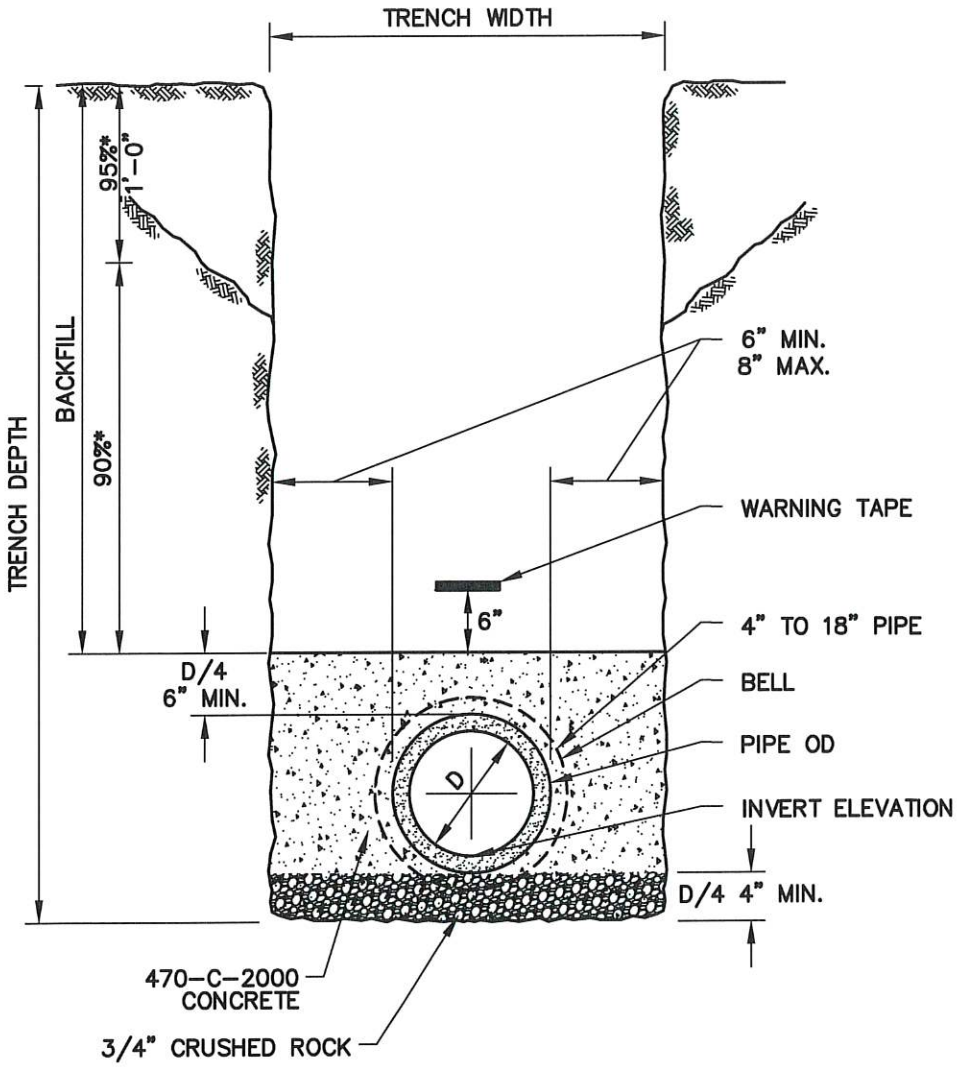

SECTION

NOTES:

1. FOR TRENCHING IN IMPROVED STREETS, SEE STD. NO. WD-36.
2. CONCRETE BACKFILL FOR PVC PIPE CAN BE USED ABOVE THE PIPE BEDDING ZONE.
3. 6" METAL TAPE SHALL BE INSTALLED ABOVE PIPE, 4" BELOW PAVEMENT SECTION.
4. (*) INDICATES MINIMUM RELATIVE COMPACTION.

LEGEND ON PLANS

CITY OF SOUTH GATE DEPARTMENT OF PUBLIC WORKS	CONCRETE BACKFILL		
APPROVED DIRECTOR OF PUBLIC WORKS	8/26/21 DATE	REVISION	STD. NO. SD-16 SHEET 1 OF 1

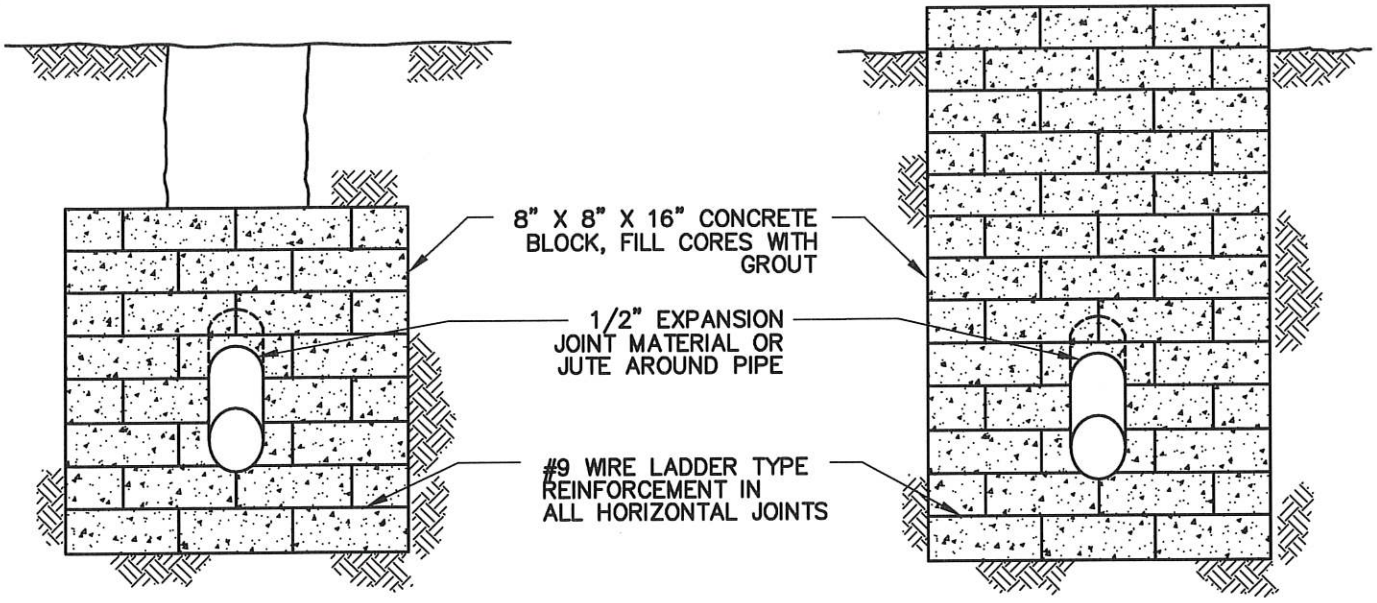

FRONT ELEVATION

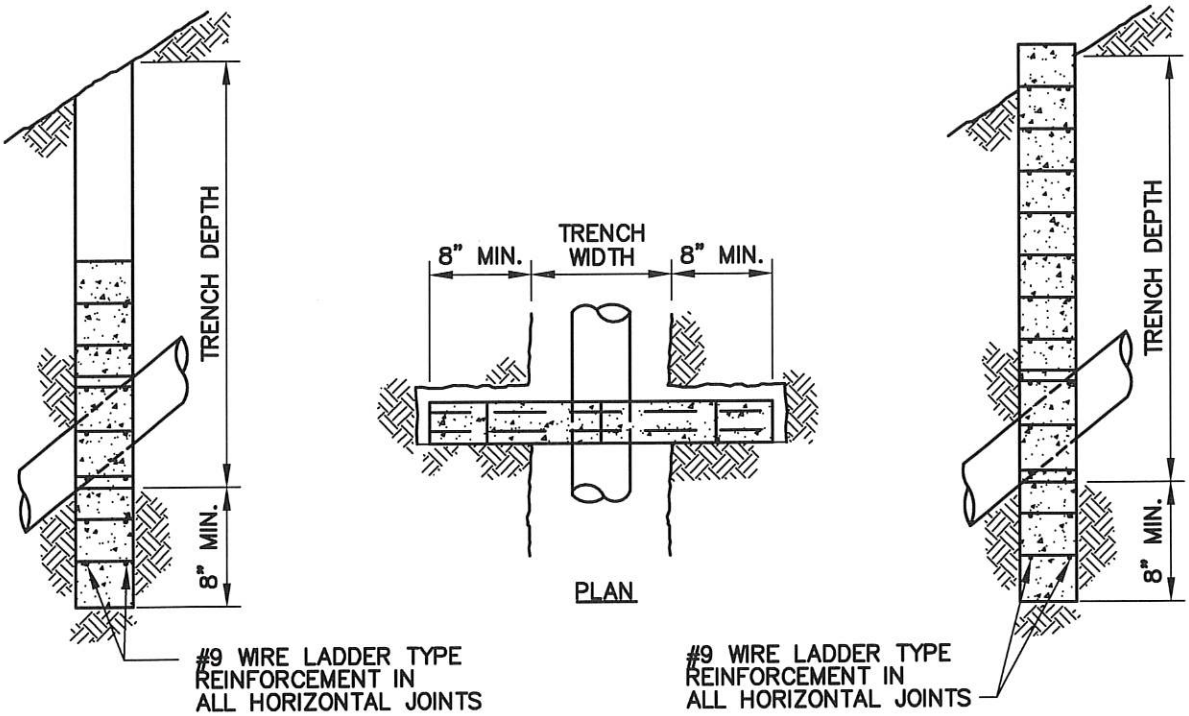

SIDE ELEVATION

PLAN

SIDE ELEVATION

NOTE:

1. PIPE PROTECTION MAY BE REQUIRED IF REQUIRED BY THE ENGINEER.

LEGEND ON PLANS

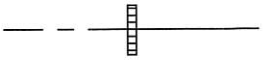

CITY OF SOUTH GATE DEPARTMENT OF PUBLIC WORKS	CONCRETE ANCHOR		
APPROVED DIRECTOR OF PUBLIC WORKS	8/26/21 DATE	REVISION	STD. NO. SD-17 SHEET 1 OF 1

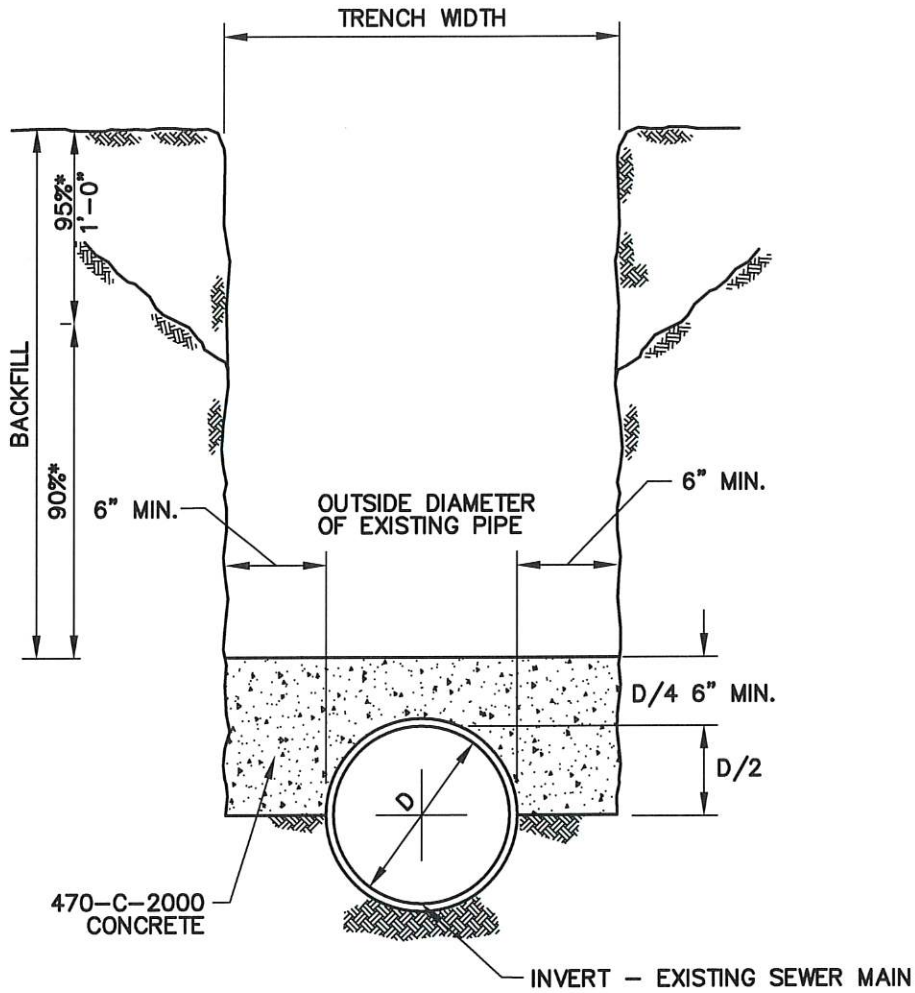

SECTION

NOTES:

1. FOR EXISTING PVC PIPE, IT SHALL BE COVERED WITH TAR PAPER, POLYURETHANE BAGGIE OR RUBBER MAT PRIOR TO POURING CONCRETE.
2. 6" METAL TAPE SHALL BE INSTALLED ABOVE PIPE, 4" BELOW PAVEMENT SECTION.
3. (*) INDICATES MINIMUM RELATIVE COMPACTION.

CITY OF SOUTH GATE DEPARTMENT OF PUBLIC WORKS	CONCRETE PROTECTION FOR EXISTING SEWER PIPE		
APPROVED DIRECTOR OF PUBLIC WORKS	8/26/21 DATE	REVISION	STD. NO. SD-18 SHEET 1 OF 1

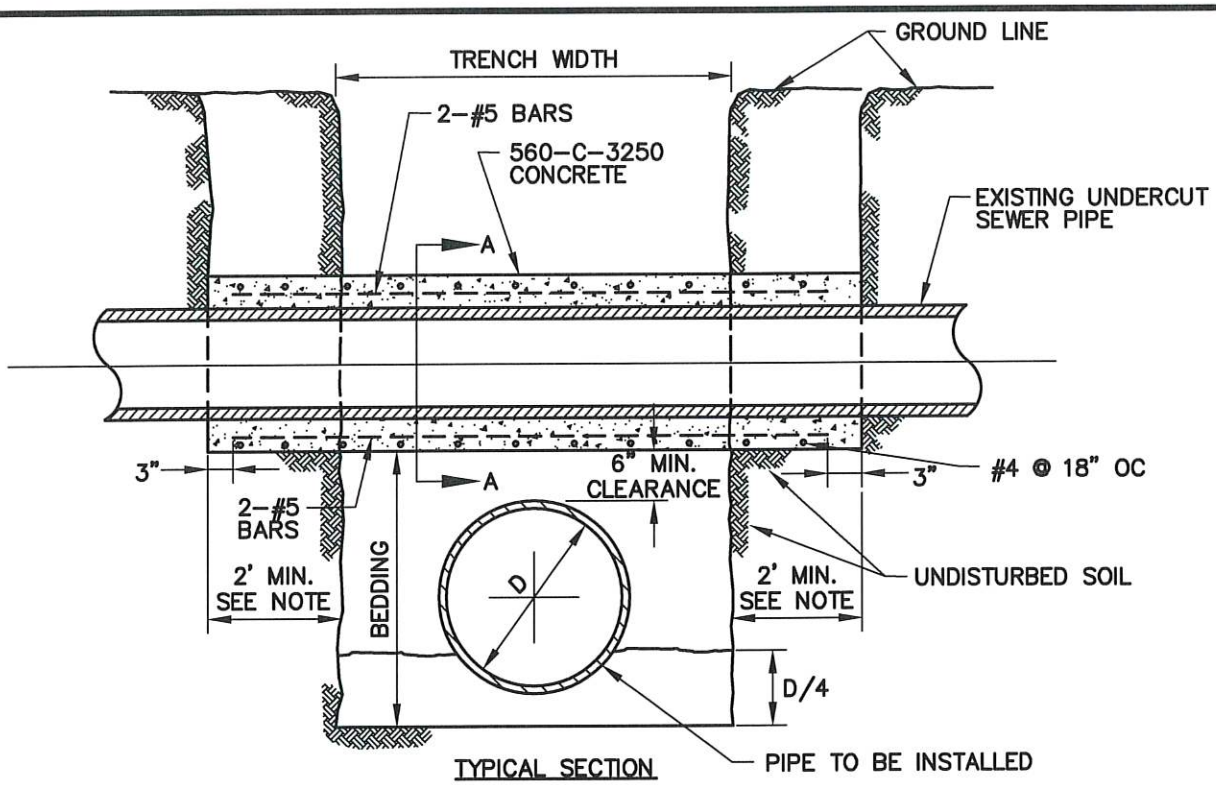

TYPICAL SECTION

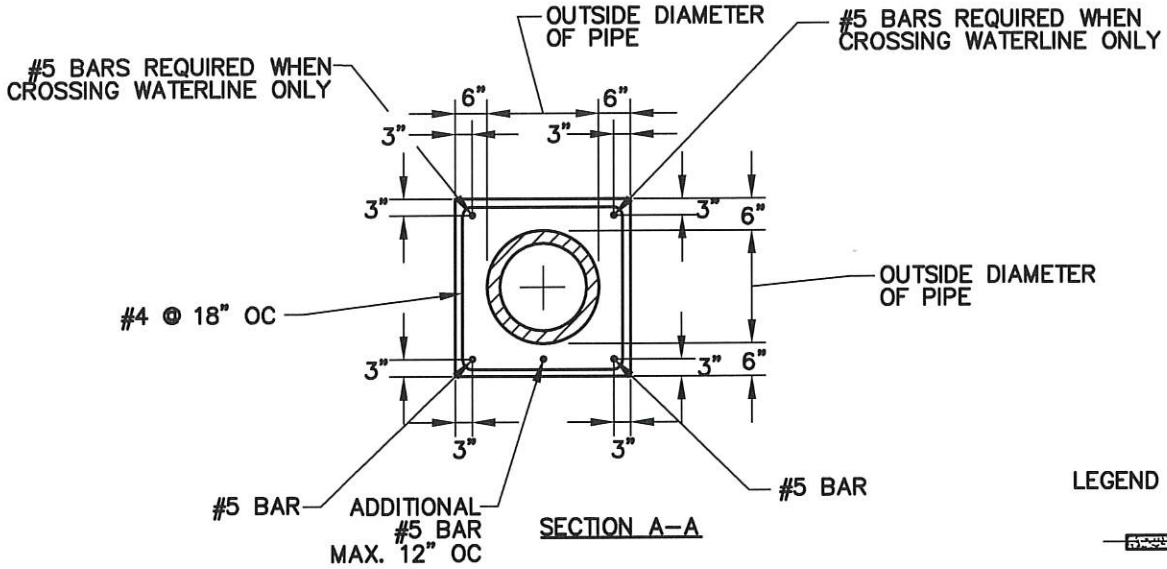

SECTION A–A

LEGEND ON PLANS

NOTES:

1. FOR WATER LINE CONSTRUCTION, ENCASEMENT SHALL EXTEND TO FIRST JOINT BEYOND 2' AT BOTH SIDES OF TRENCH OR TO A DISTANCE OF 4', WHICHEVER IS LESS.
2. WHERE CONNECTING TO FLEXIBLE PIPE, JOIN USING TWO COUPLINGS WITH A SHORT PIPE SPOOL (TYPICAL).
3. NO ENCASEMENT IS REQUIRED WHERE THE TRENCH WIDTH IS 24" OR LESS.
4. FOR EXISTING PVC PIPE, IT SHALL BE COVERED WITH TAR PAPER, POLYURETHANE BAGGIE OR RUBBER MAT PRIOR TO POURING CONCRETE.

CITY OF SOUTH GATE DEPARTMENT OF PUBLIC WORKS	**CONCRETE SUPPORT FOR UNDERCUT SEWER PIPE**		
APPROVED DIRECTOR OF PUBLIC WORKS	8/26/21 DATE	REVISION	STD. NO. **SD-19** SHEET 1 OF 1

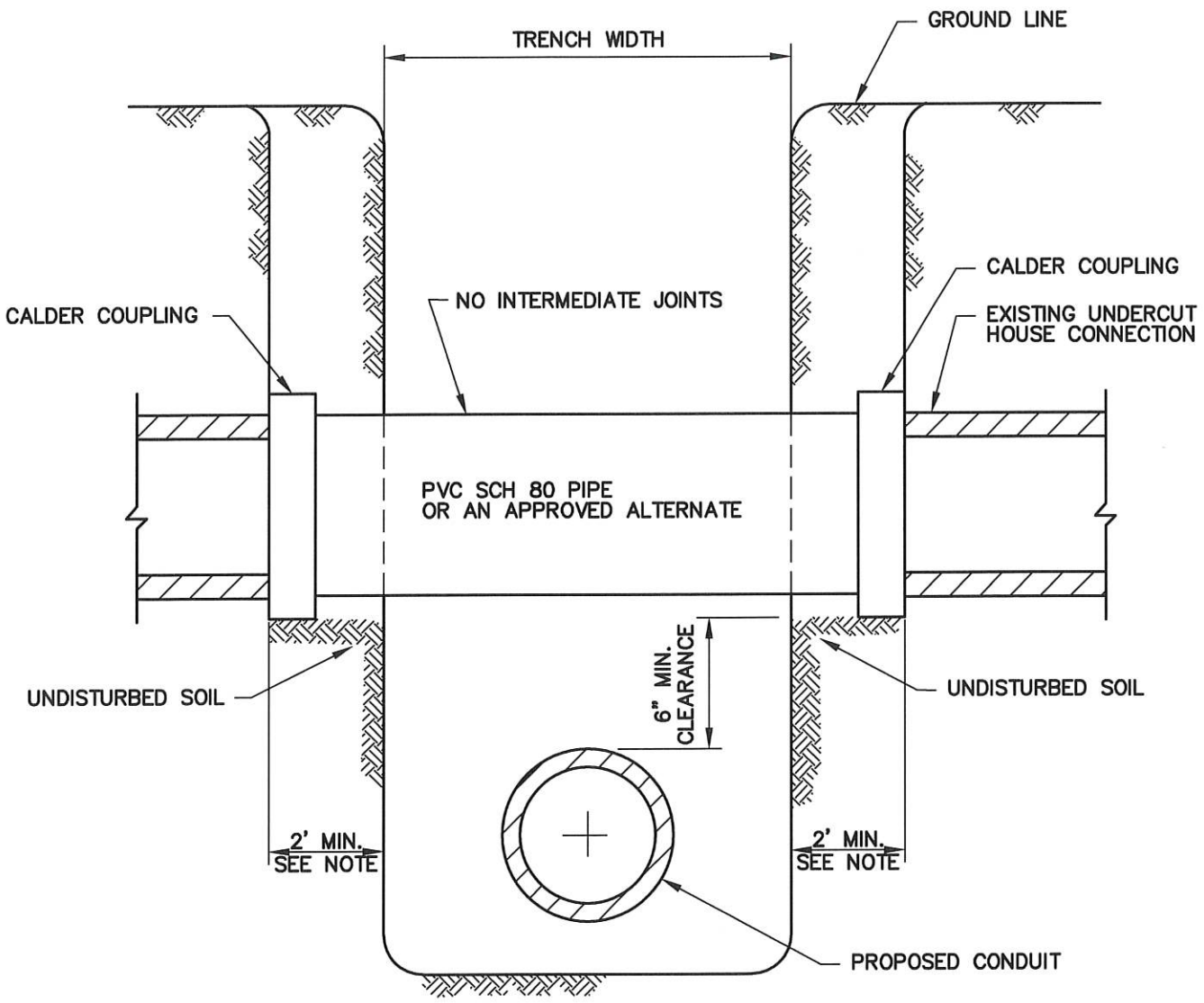

SECTION

NOTE:

1. FOR WATER LINE CONSTRUCTION, PIPE REPAIR SHALL EXTEND TO FIRST JOINT BEYOND 2' AT BOTH SIDES OF TRENCH OR TO A DISTANCE OF 4', WHICHEVER IS LESS.

CITY OF SOUTH GATE INCORPORATED JAN 20, 1923	CITY OF SOUTH GATE DEPARTMENT OF PUBLIC WORKS	HOUSE CONNECTION SEWER REPAIR	
	APPROVED DIRECTOR OF PUBLIC WORKS	8/26/21 DATE	REVISION STD. NO. SD-20 SHEET 1 OF 1

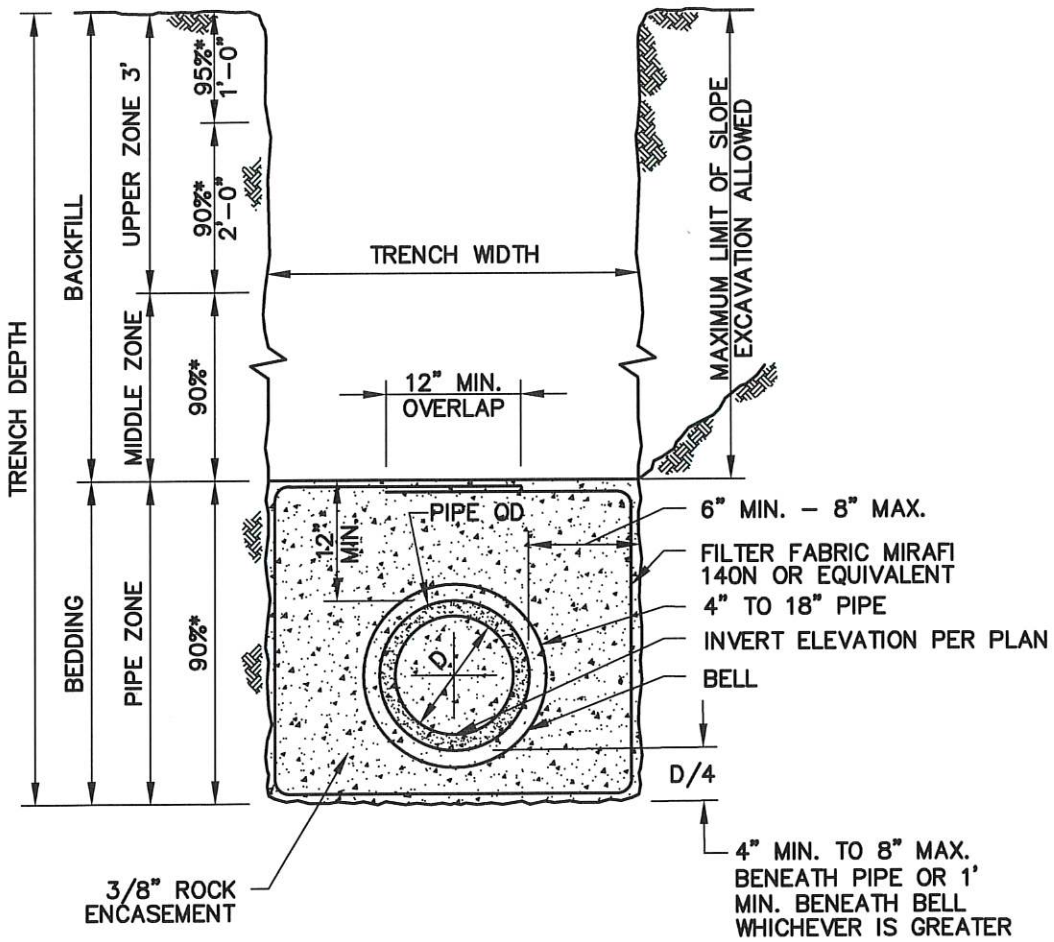

NOTES:

1. FOR TRENCH RESURFACING IN IMPROVED STREETS, SEE STD. NO. WD–36.
2. (*) INDICATES MINIMUM RELATIVE COMPACTION.
3. UNLESS INDICATED OTHERWISE IN DRAWINGS OR SPECIFICATIONS, MINIMUM DEPTH OF COVER FROM THE TOP OF PIPE TO FINISH GRADE FOR SEWER MAIN SHALL BE 5'. FOR SHALLOWER DEPTH, SPECIAL DESIGN IS REQUIRED.
4. INSTALL WARNING/IDENTIFICATION TAPE PER STD. NO. SD–14.
5. 1' SAND CUSHION OR A 6" MIN. SAND CUSHION WITH 1" NEOPRENE PAD SHALL BE PLACED FOR ALL CROSSING UTILITIES WHEN VERTICAL CLEARANCE IS 1' OR LESS. THE NEOPRENE PAD SHALL BE PLACED ON THE MOST FRAGILE UTILITY.

CITY OF SOUTH GATE INCORPORATED JAN 20, 1923	CITY OF SOUTH GATE DEPARTMENT OF PUBLIC WORKS	PIPE BEDDING AND TRENCH BACKFILL FOR SEWER IN GROUNDWATER	
	APPROVED DIRECTOR OF PUBLIC WORKS	8/26/21 DATE	REVISION STD. NO. SD-21 SHEET 1 OF 1

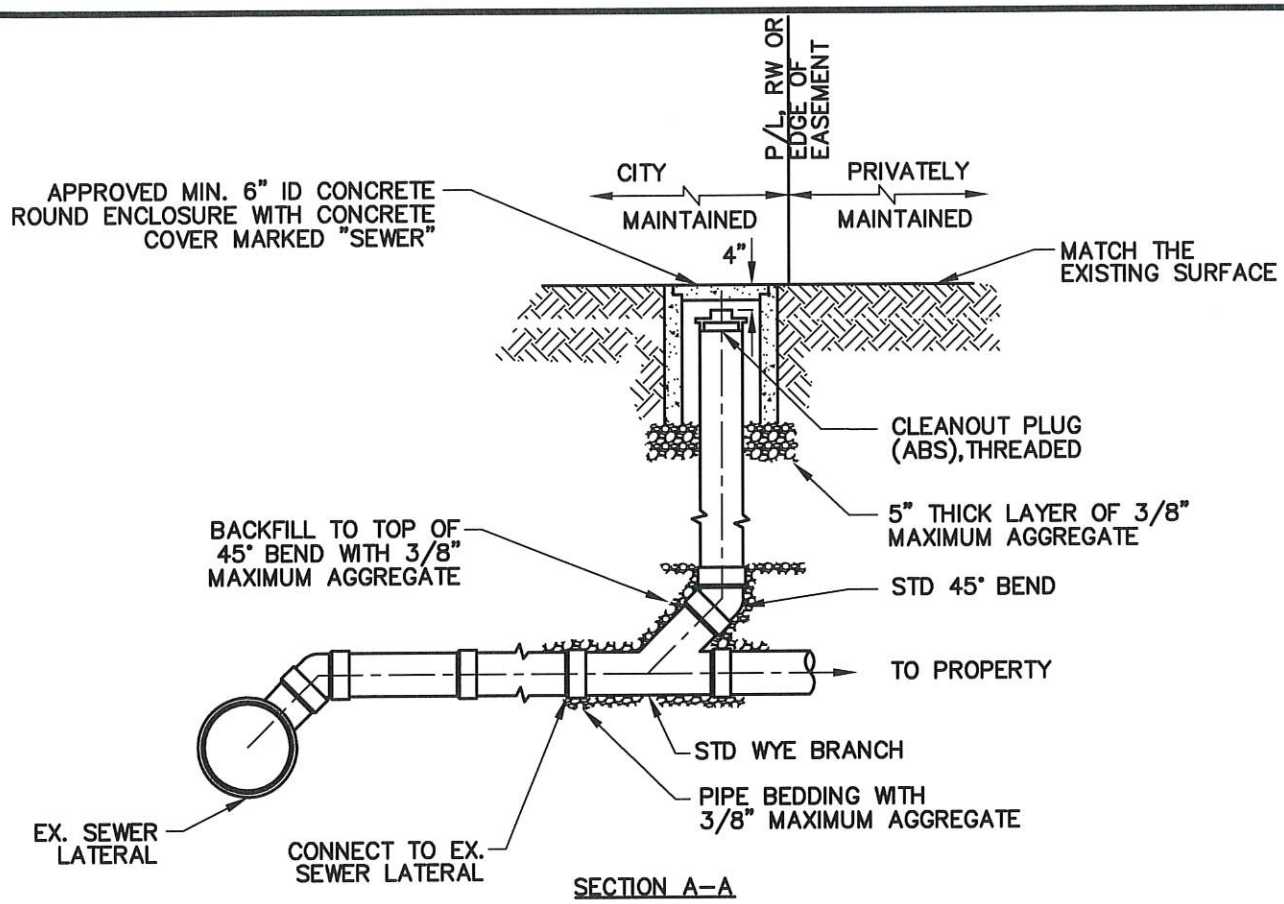

SECTION A–A

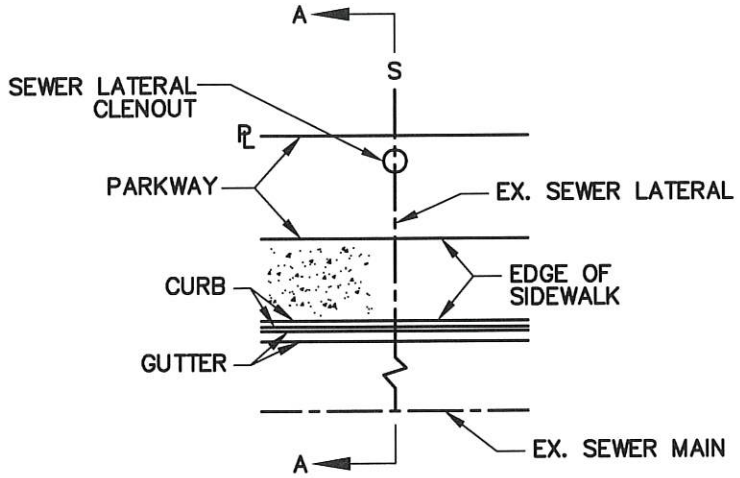

PLAN

NOTES:

1. RISER AND CLEANOUT PLUG SHALL BE SAME DIAMETER AS SEWER LATERAL.
2. CLEANOUT SHALL BE LOCATED WITHIN CITY RIGHT OF WAY, BEHIND THE SIDEWALK.

CITY OF SOUTH GATE INCORPORATED JAN 20, 1923	CITY OF SOUTH GATE DEPARTMENT OF PUBLIC WORKS	SEWER LATERAL CLEANOUT	
	APPROVED DIRECTOR OF PUBLIC WORKS	8/26/21 DATE	REVISION
			STD. NO. SD-22 SHEET 1 OF 1

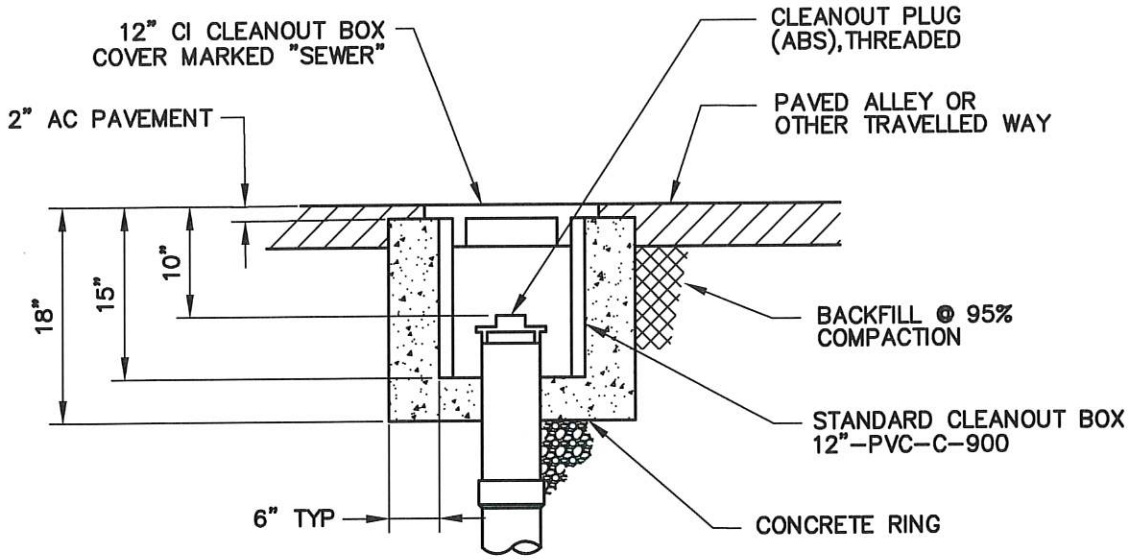

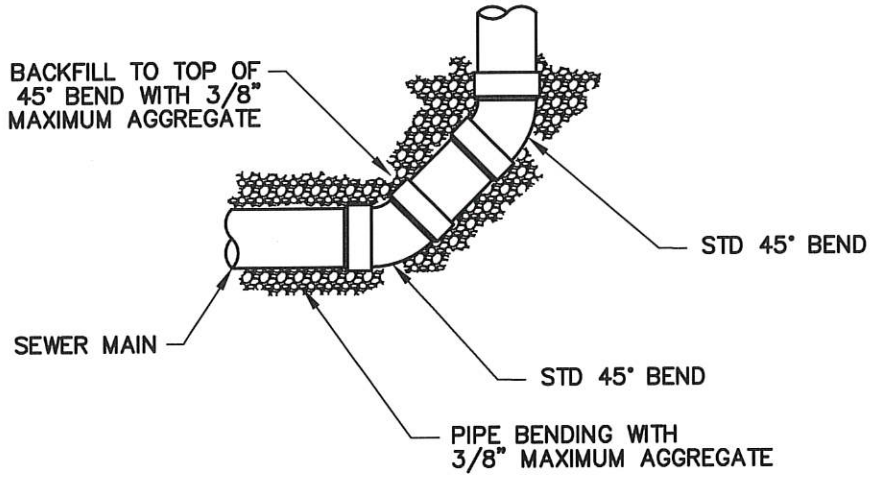

NOTES:

1. CLEANOUTS TO BE INSTALLED AT THE END OF MAINS WHERE INDICATED ON THE PLANS.
2. CLEANOUT PIPE TO BE SAME SIZE AND MATERIAL AS SEWER (MAX. DIA. 8").
3. BACKFILL TO TOP OF 45° BEND WITH 3/8" CRUSHED ROCK.
4. LATERALS SHALL BE SELECTED FROM THE CITY'S APPROVED MATERIAL LIST.

LEGEND ON PLANS

CITY OF SOUTH GATE INCORPORATED JAN 20, 1923	CITY OF SOUTH GATE DEPARTMENT OF PUBLIC WORKS	SEWER MAIN CLEANOUT		
	APPROVED DIRECTOR OF PUBLIC WORKS	8/26/21 DATE	REVISION	STD. NO. SD-23 SHEET 1 OF 1

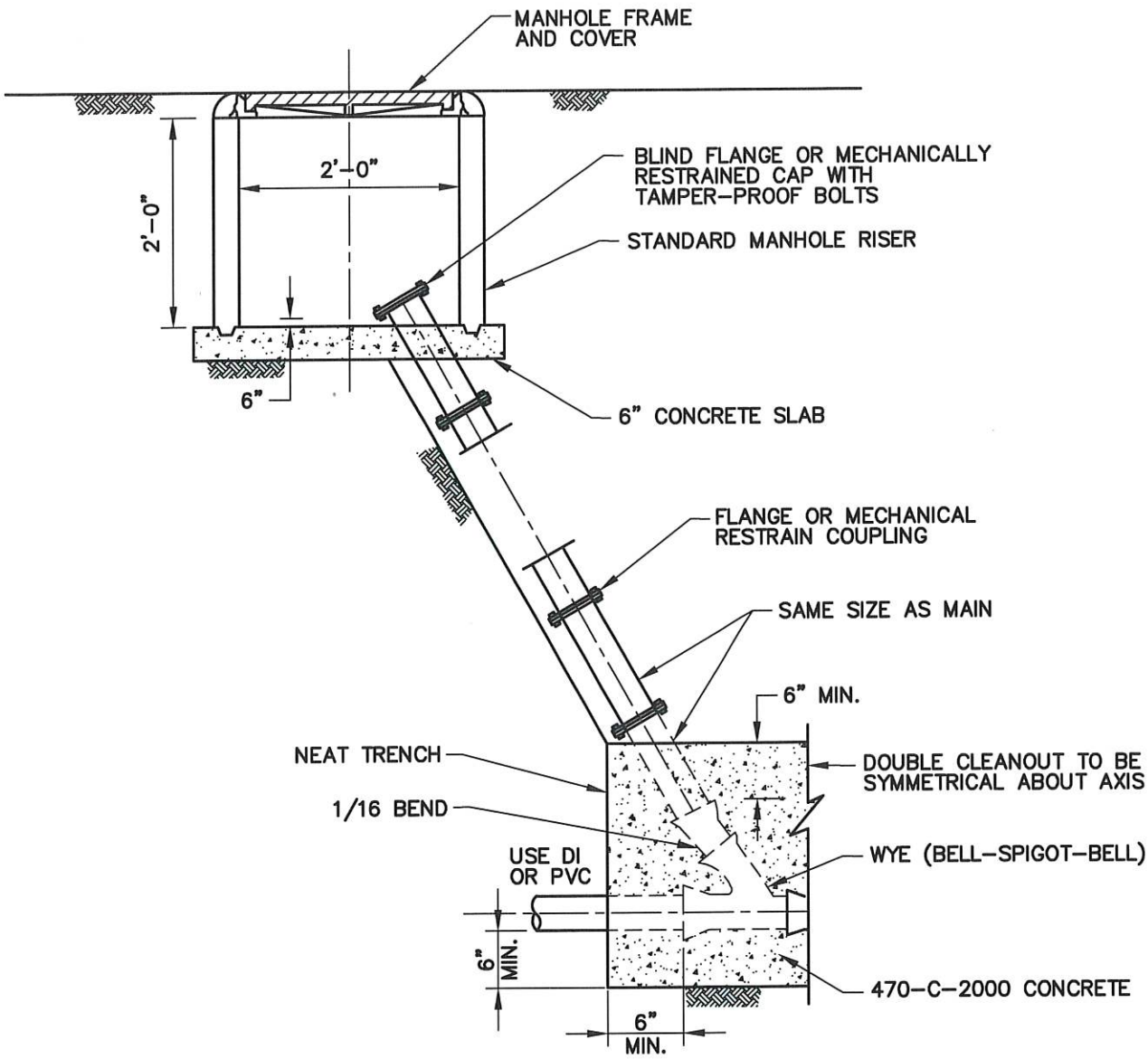

LEGEND ON PLANS

CO

NOTES:

1. CONCRETE SLAB SHALL BE 560-C-3250.
2. USE HEAVY DUTY MANHOLE FRAME AND COVER, STD. NO. SD-7, IN AREAS SUBJECT TO VEHICULAR TRAFFIC. USE LIGHT DUTY MANHOLE FRAME AND COVER, STD. NO. SD-8, IN ALL OTHER LOCATIONS.
3. MINIMUM PIPE PRESSURE CLASS 200.

CITY OF SOUTH GATE INCORPORATED JAN 20, 1923	CITY OF SOUTH GATE DEPARTMENT OF PUBLIC WORKS	CLEANOUT - SEWER FORCE MAIN	
	APPROVED DIRECTOR OF PUBLIC WORKS	8/26/21 DATE	REVISION
			STD. NO. SD-24 SHEET 1 OF 1

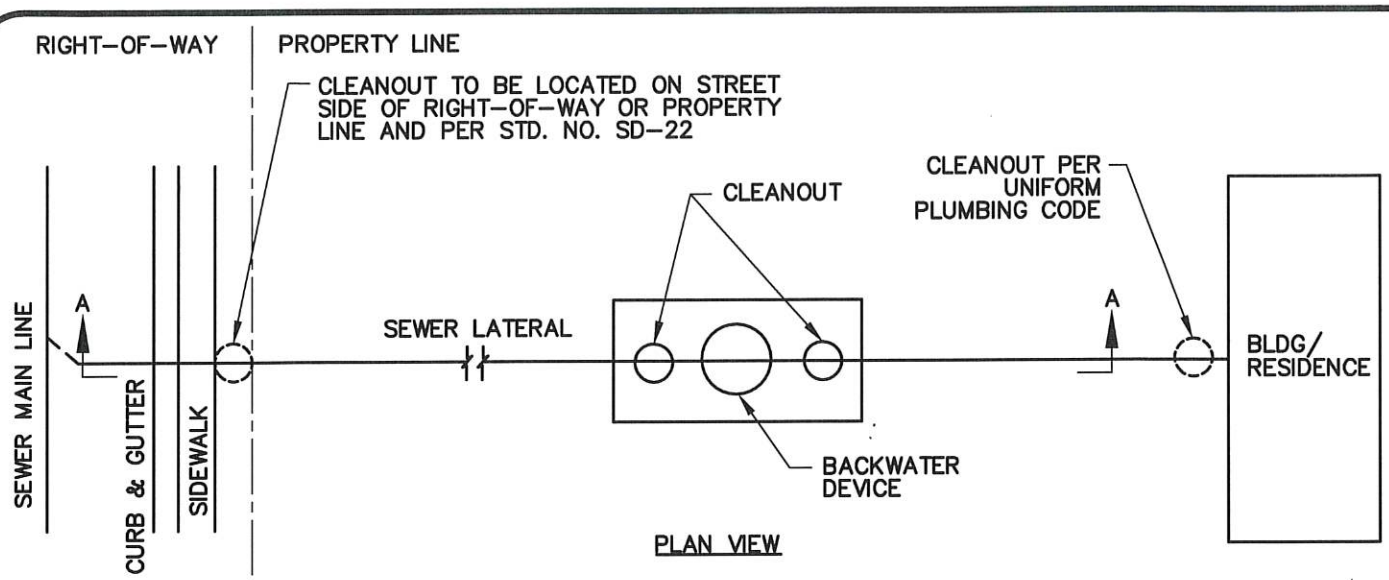

PLAN VIEW

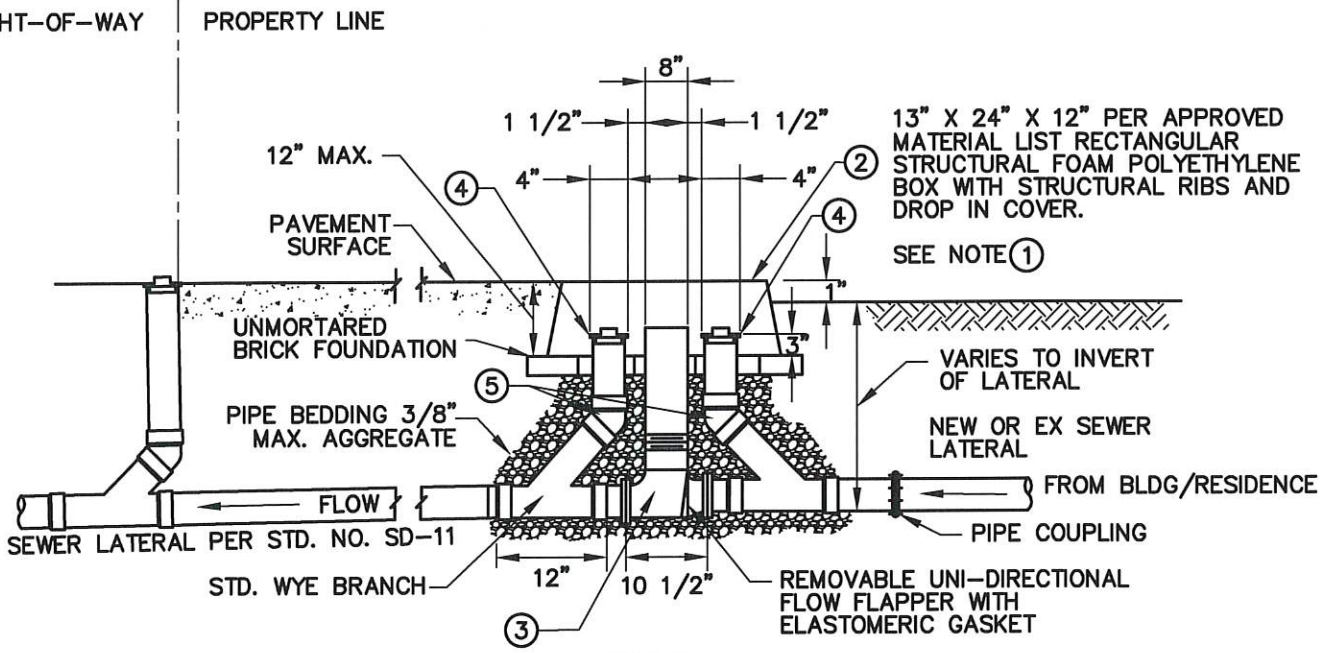

SECTION A-A

NOTES:

1. WHEN BACKWATER DEVICE IS INSTALLED IN THE DRIVEWAY, SEE SHEET 2.
2. INSTALL VALVE BOX SO THAT IT IS FLUSH WITH PAVEMENT SURFACE OR 1" ABOVE FINISH GRADE (SOIL SURFACE).
3. PVC BACKWATER DEVICE AND ATTACHED PARTS SHALL BE PER THE CALIFORNIA PLUMBING CODE (CPC).
4. CLEANOUT PLUG (ABS) THREADED.
5. STANDARD 45° BEND.
6. THE BACKWATER DEVICE SHALL BE LOCATED AS CLOSE TO THE STRUCTURE AS REASONABLY POSSIBLE TO MINIMIZE THE DEPTH OF THE BACKWATER DEVICE.

CITY OF SOUTH GATE INCORPORATED JAN 20, 1923	CITY OF SOUTH GATE DEPARTMENT OF PUBLIC WORKS	4" BACKWATER DEVICE	
	APPROVED DIRECTOR OF PUBLIC WORKS	8/26/21 DATE	REVISION
			STD. NO. SD-25 SHEET 1 OF 2

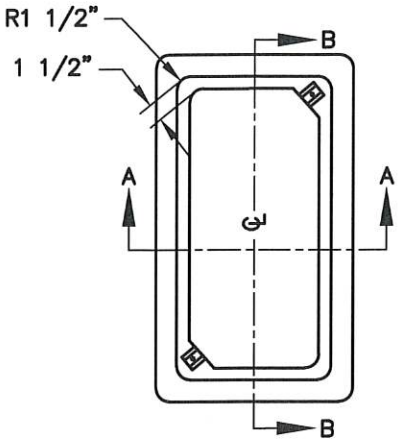

TOP VIEW

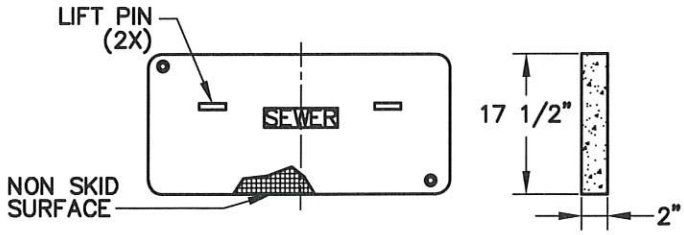

POLYMER CONCRETE COVER

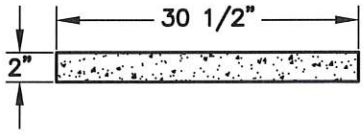

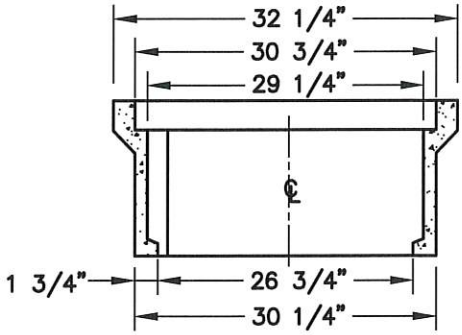

SECTION B–B

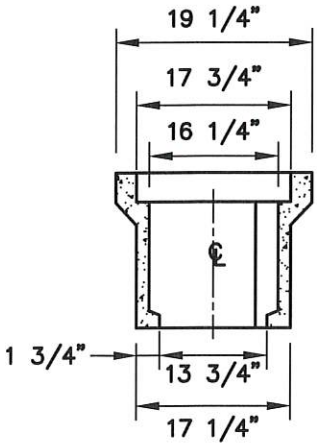

SECTION A–A

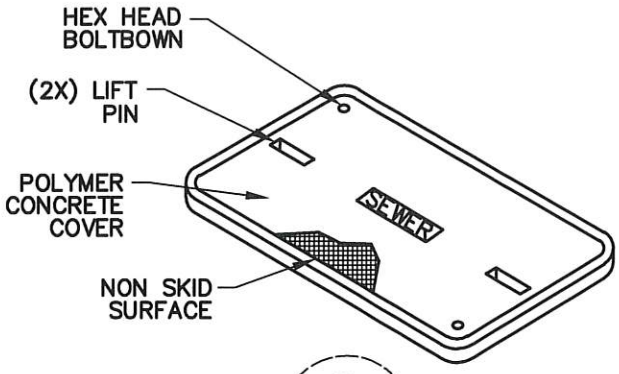

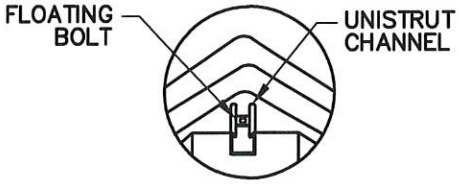

DETAIL –A

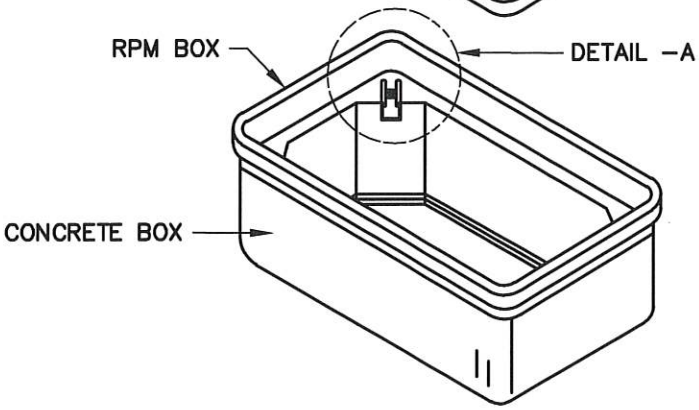

NOTE:

1. THE BOX & COVER IS 10K LOAD RATED.

CITY OF SOUTH GATE DEPARTMENT OF PUBLIC WORKS	4" BACKWATER DEVICE		
APPROVED DIRECTOR OF PUBLIC WORKS	8/26/24 DATE	REVISION	STD. NO. SD-25 SHEET 2 OF 2

ALTHOUGH REQUIRED BY THE CITY, THIS UNIT IS TO BE OWNED AND MAINTAINED BY THE PROPERTY OWNER.

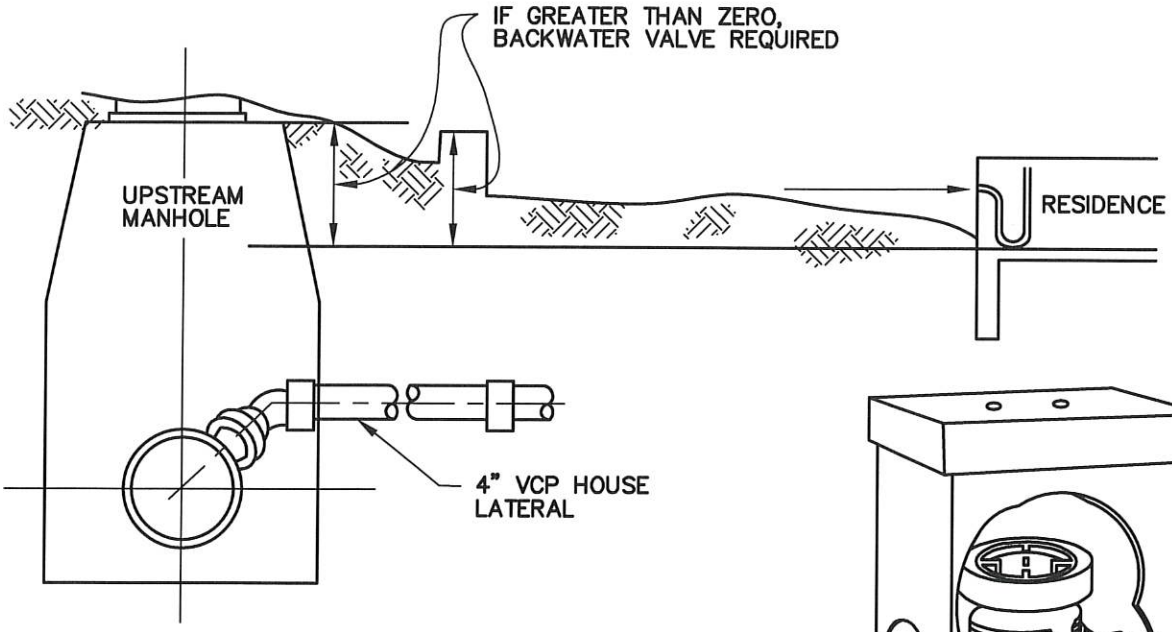

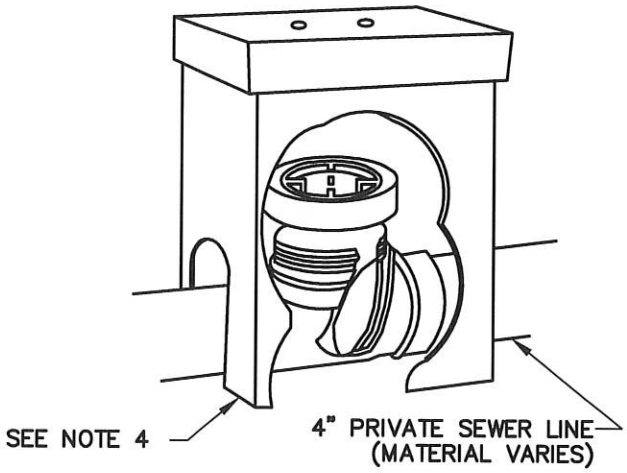

HOUSE CONNECTION

BACKWATER VALVE

NOTES:

1. THE BACKWATER VALVE INSTALLATION SHALL BE INSTALLED WHERE: (A) PLUMBING FIXTURE LEVELS ARE BELOW THE ELEVATION OF THE CURB AT THE POINT WHERE THE BUILDING SEWER CROSSES UNDER THE CURB OR (B) PLUMBING FIXTURES LEVELS ARE BELOW THE ELEVATION OF THE UPSTREAM MANHOLE RIM UNLESS WAIVED IN WRITING BY THE CITY OF SOUTH GATE.
2. THE RECOMMENDED OUTLET ELEVATION IS ONE FOOT BELOW THE FLOOR ELEVATION, BUT UNDER NO CIRCUMSTANCES SHALL THIS ELEVATION BE LESS THAN 4".
3. CAUTION SHALL BE EXERCISED IN LOCATING THE HOOD TO AVOID DAMAGE TO INSTALLATION FROM SURFACE IMPACT.
4. BACKWATER OVERFLOW VALVE MANUFACTURER TO BE SAME AS CURRENTLY APPROVED BY THE CITY OF SOUTH GATE.

① BACKWATER VALVE

② 4" COUPLING*

③ 4" PIPE*

④ 4" 1/8 BEND AND WYE (PLAIN ENDS)*

*MATERIAL VARIES

CITY OF SOUTH GATE DEPARTMENT OF PUBLIC WORKS	**BACKWATER DEVICE FOR HOUSE CONNECTIONS**		
APPROVED DIRECTOR OF PUBLIC WORKS	8/26/21 DATE	REVISION	STD. NO. **SD-26** SHEET 1 OF 1

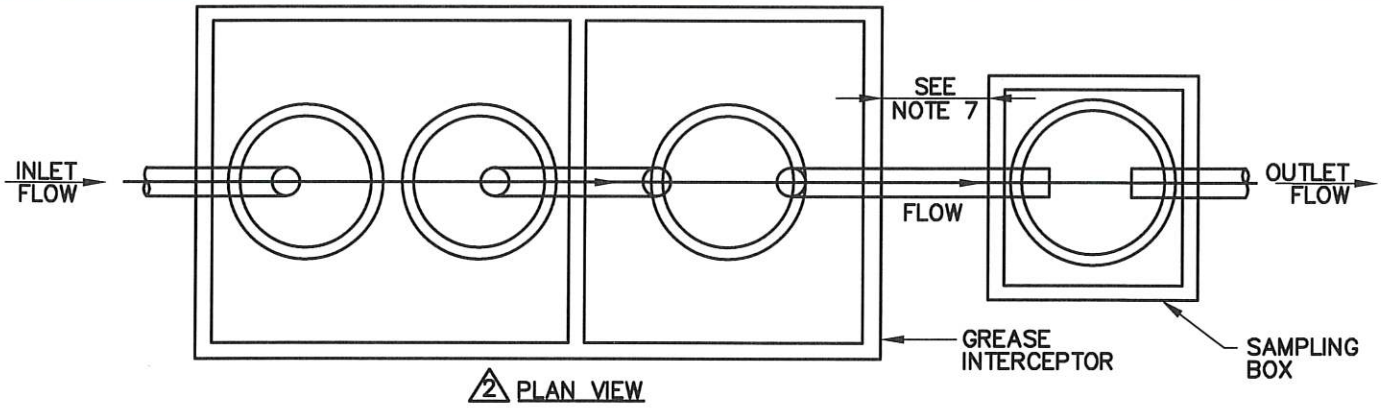

2 PLAN VIEW

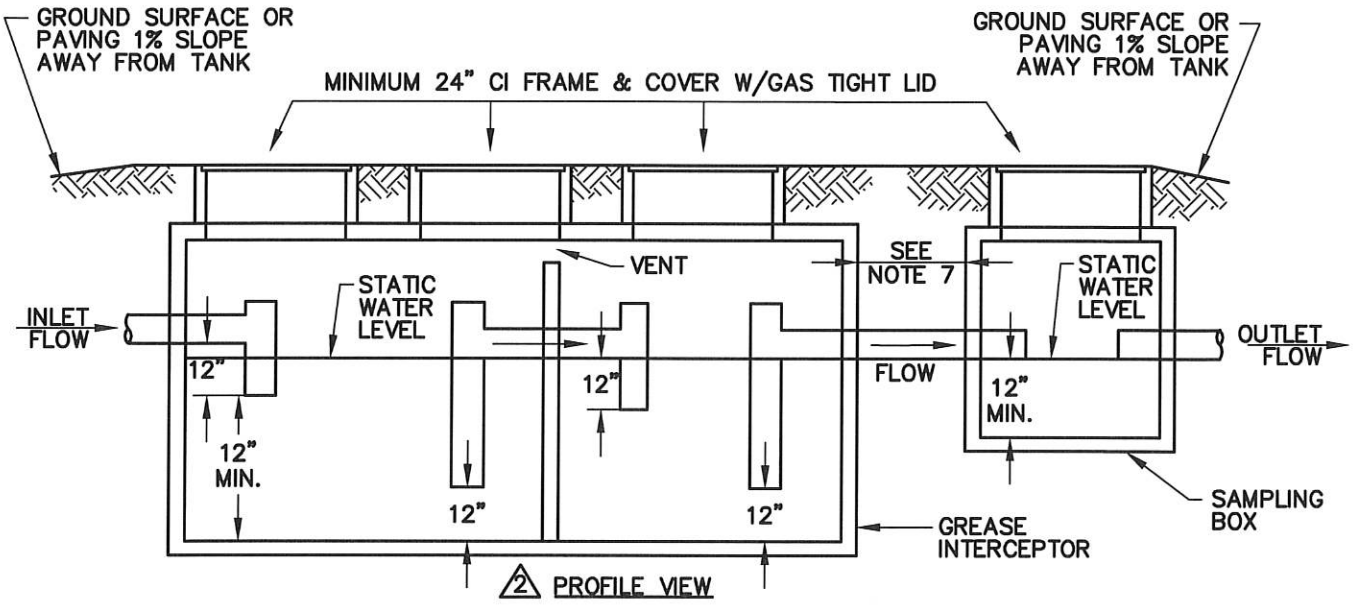

2 PROFILE VIEW

NOTES:

1. STRUCTURE SHALL BE INSTALLED TO ALLOW ACCESS FOR MAINTENANCE OR INSPECTION AT ALL TIMES.
2. WHERE SUBJECT TO VEHICLE LOADING, DESIGN ADEQUACY SHALL BE SUBSTANTIATED AND STRUCTURE SHALL BE PLACED ON SUITABLE BASE OF COMPACTED SOIL OR UNDISTURBED EARTH.
3. ALL SURFACE WATER MUST DRAIN AWAY FROM THE SAMPLING BOX AND INTERCEPTOR TO EXCLUDE RAIN WATER FROM THE SEWER SYSTEM.
4. FLOW TO THE SAMPLING BOX AND/OR INTERCEPTOR SHALL EXCLUDE ALL SANITARY SEWAGE AND SURFACE DRAINAGE.
5. EACH INSTALLATION IS SUBJECT TO REVIEW BY THE CITY OF SOUTH GATE FOR ADEQUATE CAPACITY PRIOR TO CONSTRUCTION.
6. INSPECTION COVERS SHALL BE BROUGHT TO GRADE TO PERMIT VISUAL INSPECTION OF INTERNAL FITTINGS, WITH RISERS AS REQUIRED.
7. SAMPLING BOX SHALL BE A MINIMUM OF 24" ID. SAMPLING BOX MAY BE ATTACHED OR AT A VARIABLE DISTANCE FORM THE INTERCEPTOR AS APPROVED BY THE CITY OF SOUTH GATE SOURCE CONTROL DIVISION.
8. MINIMUM CAPACITY OF INTERCEPTOR IS 750 GALLONS.
9. INTERCEPTORS REQUIRING MORE THAN 6 FEET OF GRADE RINGS MUST HAVE APPROVAL BEFORE INSTALLATION.

CITY OF SOUTH GATE DEPARTMENT OF PUBLIC WORKS	**GREASE INTERCEPTOR WITH 24" SAMPLE BOX**		
APPROVED DIRECTOR OF PUBLIC WORKS	8/26/24 DATE	REVISION	STD. NO. **SD-27** SHEET 1 OF 1